455 D

Control Board

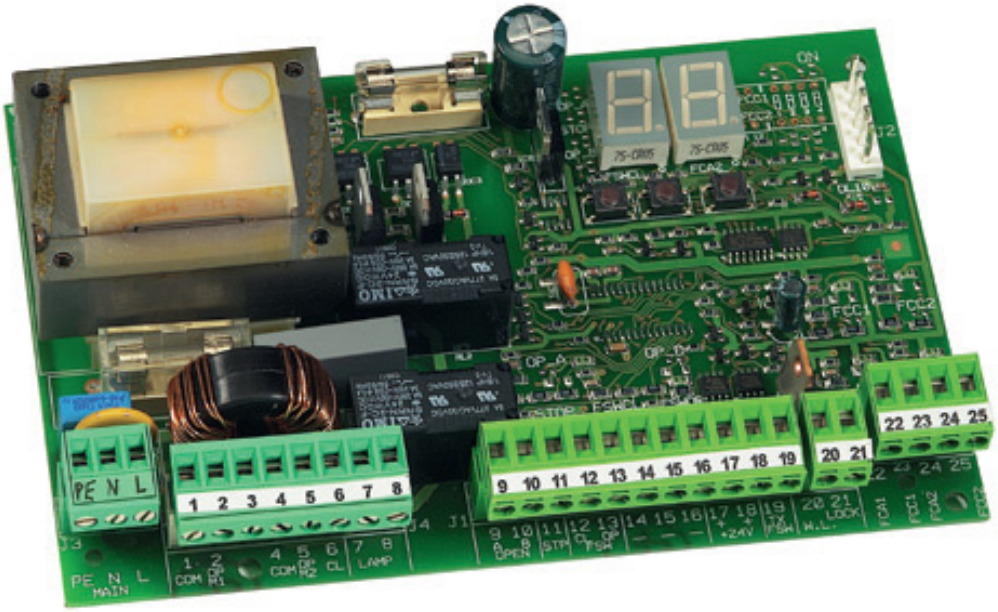

FAAC

CONTENTS

1. 455 D CONTROL BOARD **3**

1.1 455 D Control Board Warnings 3

1.2. Technical Specifications 3

1.3 Electric Connections 3

1.4. 455 D Layout and Components 3

1.5 Programming 7

1.6 Start-Up 9

1.7 System Test 10

2. OPERATING MODES DETAILED DESCRIPTION **11**

3. PREWIRED ENCLOSURE DIAGRAM **13**

4. POWER AND ACCESSORIES CONNECTIONS **14**

AC Power Wiring Guidelines 14

AC Power Connection 14

Magnetic Lock Connection 14

LIMITED WARRANTY **15**

Read this instruction manual before you begin installing the product.

⚠ = Information regarding personal safety and proper maintanence of the product.

☞ = Information regarding the product's characteristics or operation.

455 D Control Board - Rev: 01 - October 2010

(800) 878-7829 www.FastGateOpeners.com

1. 455 D CONTROL BOARD

1.1 455 D Control Board Warnings

⚠ Important: Before attempting any work on the control board (connections, maintenance), always turn off power.

Please refer to Chapter 16 for AC power wiring guidelines

1.2. Technical Specifications

Power Supply 115 V~ ± 10% or 230 V~ +6% -10% 50/60 Hz

Absorbed Power 10 W

Motor Max. Load 800 W

Accessories Max. Load 0,5 A

Electric Lock Max. Load 15 VA

Ambient Operating Temperature Range -4°F to +131°F

Protection Fuses 2 (see Fig. A)

Function Logics: Semi-automatic / Automatic / Safety Devices / "Stepped" Semi-automatic / "Stepped" Automatic / "Stepped" Safety Devices / Semi-automatic B / Dead-man C

Opening/Closing Time Programmable (from 0 to 120 s)

Pause Time Programmable (from 0 to 4 min.)

Closing Leaf Delay Programmable (from 0 to 4 min.)

Opening Leaf Delay 2 s (can be excluded)

Thrust Force: Adjustable on 50 levels for each motor

Terminal Board Inputs: Open / Open Free Leaf / Stop / Limit-switch Opening Safety Devices / Closing Safety Devices / Power Supply + Earth.

Terminal Board Outputs: Flashing Lamp / Motors / 24 VDC Accessories Power Supply / 24 VDC Indicator-Light / Fail Safe / 12 VAC Electric Lock Power Supply

Programmable Functions: Logic / Pause Time / Thrust Force / Torque at Initial Thrust / Opening and Closing Leaf Delay / Reversing Stroke / Over-Pushing Stroke / Indicator-Light / Pre-Flashing / Electric Lock / Fail Safe / Safety Devices Logic / Assistance Request / Detection Time of Obstacle or Contact Point

Learning Function: Simple or complete work time learning, with or without Limit-switch and/or Gatecoder.

1.4. 455 D Layout and Components

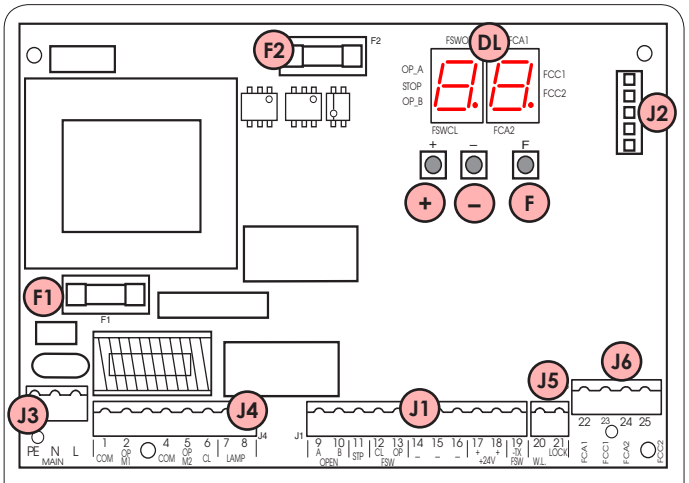

Figure A

DL SIGNALLING AND PROGRAMMING DISPLAY

J1 LOW VOLTAGE TERMINAL BLOCK

J2 CONNECTOR FOR RP RECEIVER

J3 AC POWER SUPPLY TERMINAL BLOCK

J4 MOTORS AND FLASHING LAMP CONNECTION TERMINAL BLOCK

J5 INDICATOR-LIGHT AND ELECTRIC LOCK TERMINAL BLOCK

J6 LIMIT-SWITCH AND GATECODER TERMINAL BLOCK

F1 MOTORS AND TRANSFORMER PRIMARY WINDING FUSE (F 5A - 230V) (F 10A - 115V)

F2 LOW VOLTAGE AND ACCESSORIES FUSE (T 800mA)

F "F" PROGRAMMING PUSH-BUTTON

– "–" PROGRAMMING PUSH-BUTTON

+ "+" PROGRAMMING PUSH-BUTTON

1.3 Electric Connections

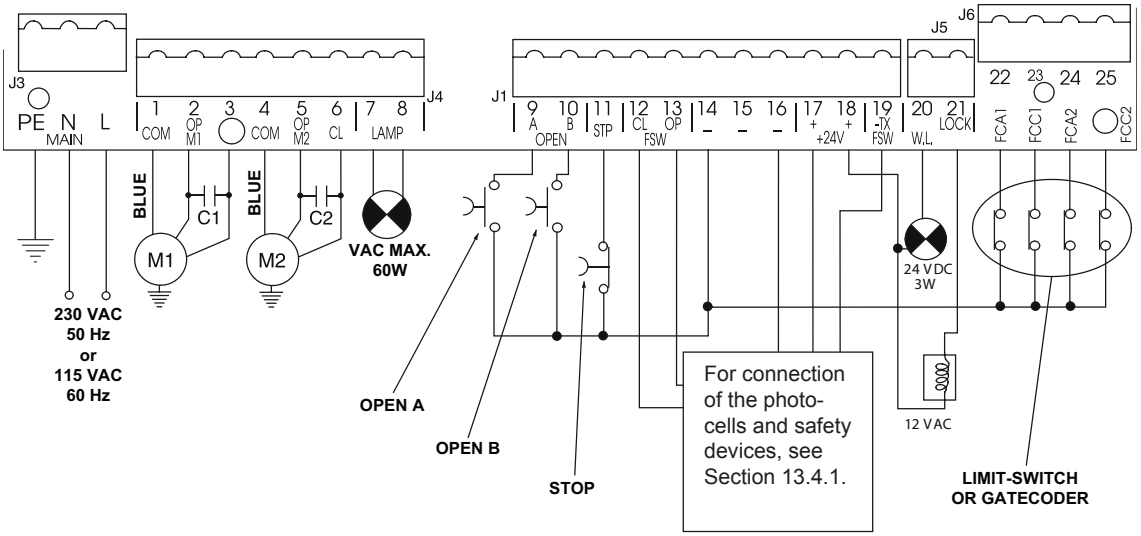

NB: Capacitors are supplied with the operator.

Figure B

(800) 878-7829 www.FastGateOpeners.com

1.4.1 Connection of Photocells and Safety Devices

Before connecting the photocells (or other devices), it is advisable to select the type of operation according to the movement area they have to protect (see Fig.C):

Opening Safety Devices:

They operate only during the gate opening movement and, therefore, are suitable for protecting the area between the opening leaves and fixed obstacles (walls, etc) against the risk of impact and crushing.

Opening/Closing Safety Devices

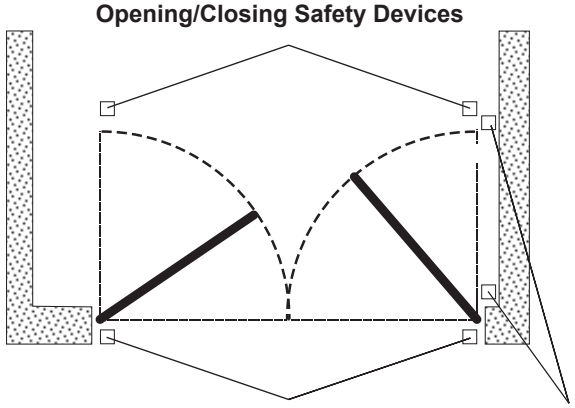

Figure C Closing Safety Devices Opening Safety Devices

Connection of ONE Pair of Closing Photocells, ONE Pair of Opening Photocells and ONE Pair of Opening/Closing Photocells (Recommended Layout)

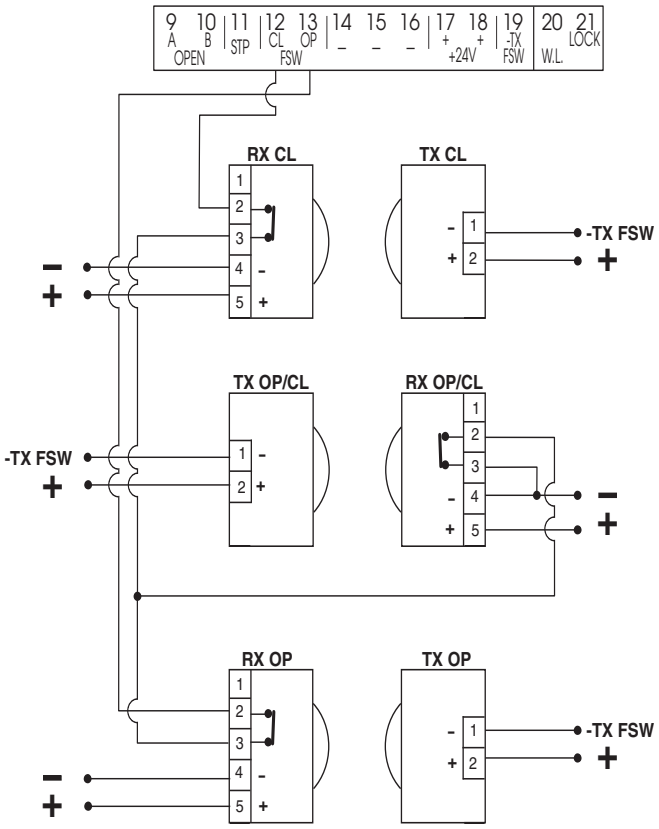

Figure D

NOTE: All safety devices must be connected using NORMALLY CLOSED outputs.

Closing Safety Devices:

They operate only during the gate closing movement and, therefore, they are suitable for protecting the closing area against the risk of impact.

Opening/Closing Safety Devices:

They operate during the gate opening and closing movements and, therefore, they are suitable for the opening and closing areas against the risk of impact.

FAAC recommends use of the lay-out in Fig. D (in the event of fixed obstacles at opening) or in Fig. E (no fixed obstacles).

N.B. If two or more devices have the same function (opening or closing), they should be connected to each other in series (see Fig. L).

Connection of ONE Pair of Closing Photocells and ONE Pair of Opening/Closing Photocells (Recommended Layout)

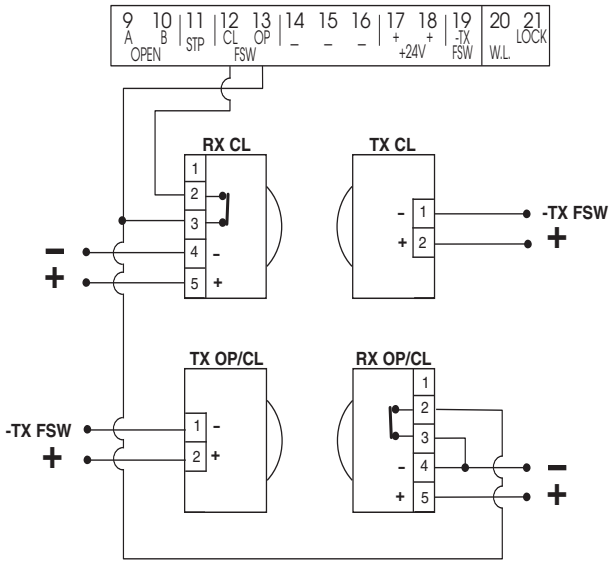

Figure E

Connection of ONE Closing Safety Device and ONE Opening Safety Device

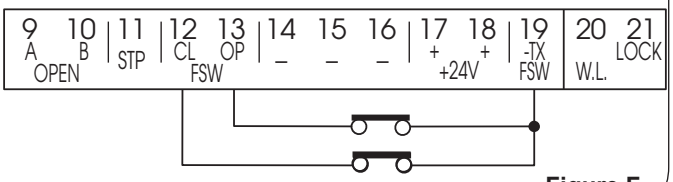

Figure F

Connection of NO Safety Devices

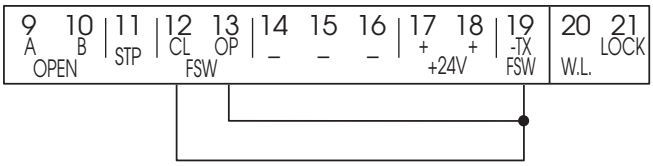

Figure G

Connection of ONE Pair of Opening Photocells

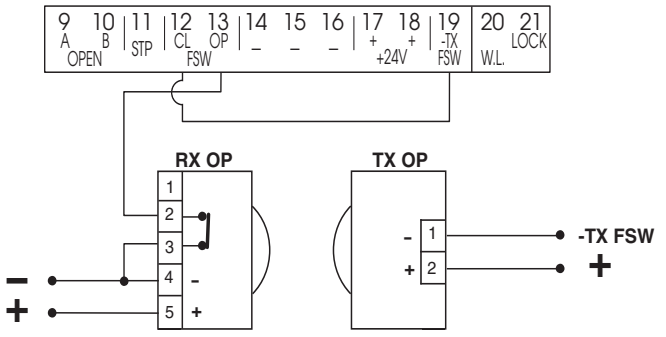

Figure H

Connection of ONE Pair of Closing Photocells

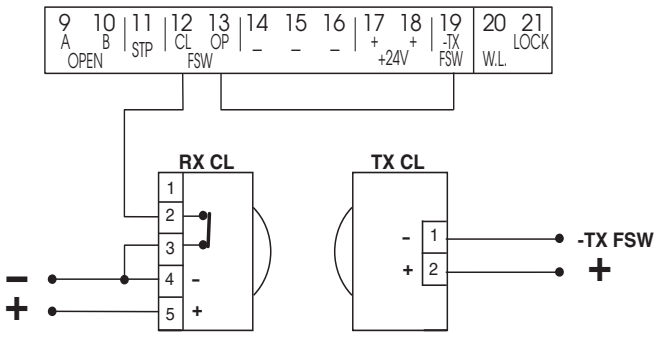

Figure I

Connection of ONE Pair of Opening Photocells and ONE Pair of Closing Photocells

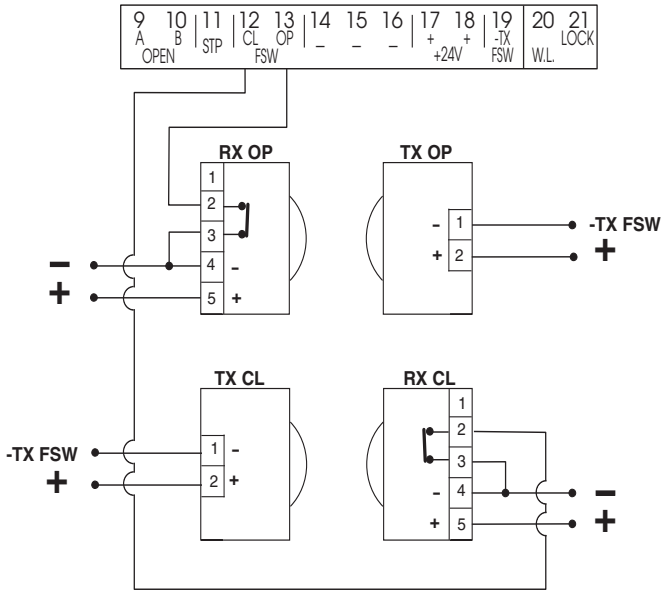

Figure J

Connection of TWO Pairs of Closing Photocells

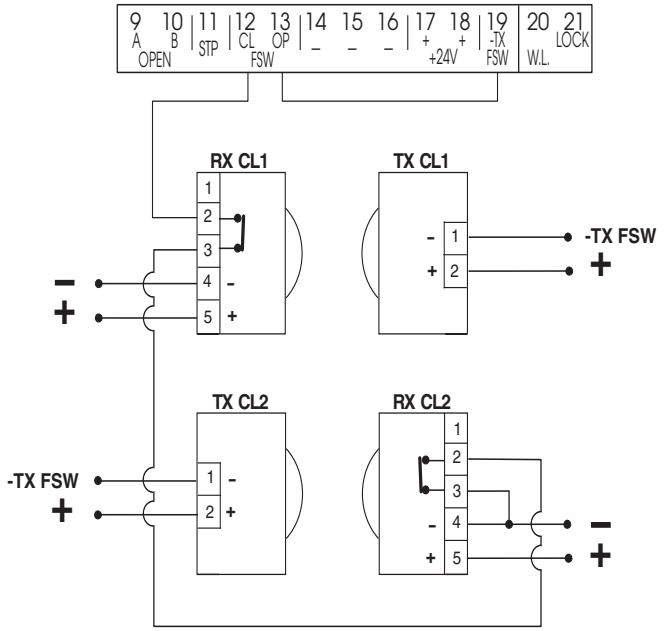

Figure K

Connection of TWO N.C. Contacts in Series (e.g. Photocells, Stop)

Figure L

Connection of TWO N.O. Contacts in Parallel (e.g. Open A, Open B)

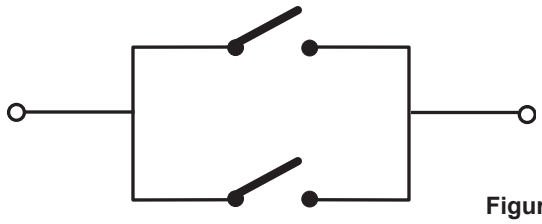

Figure M

1.4.2 Terminal Block J3 - Power Supply (Fig. B)

PE: Earth Connection / Ground

N: AC V~ power supply (Neutral)

L: AC V~ power supply (Line)

NB: *For correct operation, the board must be properly grounded.*

1.4.3 Terminal Block J4 - Motors and Flashing Lamp

M1: COM / OP / CL: Connection to Motor 1
Can be used in single-leaf configuration

M2: COM / OP / CL: Connection to Motor 2
Cannot be used in single-leaf configurations

LAMP: Flashing lamp output (AC V ~)

(800) 878-7829 www.FastGateOpeners.com

1.4.4 Terminal Block J1 - Accessories (Fig. B)

OPEN A - "Total Opening" Command (N.O.):

Any pulse generator (push-button, detector, etc.) which, by closing a contact, commands opening and/or closing of both gate leaves. To install several full opening pulse generators, connect the N.O. contacts in parallel.

OPEN B - "Partial Opening" Command (N.O.) / Closing:

Any pulse generator (push-button, detector, etc.) which, by closing a contact, commands opening and/or closing of the leaf driven by motor M1. In the **B** and **C** logics, it always commands closing of both leaves. To install several partial opening pulse generators, connect the N.O. contacts in parallel.

STP - STOP Contact (N.C.):

Any device (e.g. a push-button) which, by opening a contact, is able to stop gate movement. To install several STOP devices, connect the N.C. contacts in series.

NB: If STOP devices are not connected, jumper connect the STP terminals and -.

CL FSW - Closing Safety Devices Contact (N.C.):

The purpose of the closing safety devices is to protect the leaf movement area during closing. During closing, in the **E-A-S-EP-AP-SP** logics, the safety devices reverse the movement of the gate leaves, or stop and reverse the movement when they are released (see *Advanced Programming in Section 13.5.2*). During the closing cycle in logics **B** and **C**, they interrupt movement. They never operate during the opening cycle. If the **closing safety devices** operate when the gate is open, they prevent the leaf closing movement.

NB: If no closing safety devices are connected, jumper connect terminals CL and -TX FSW (Fig. G).

OP FSW - Opening safety devices contact (N.C.):

The purpose of the opening safety devices is to protect the leaf movement area during opening. During opening, in the **E-A-S-EP-AP-SP** logics, the safety devices reverse the movement of the gate leaves. During the opening cycle in logics **B** and **C**, they interrupt movement. They never operate during the closing cycle.

If the **opening safety devices** operate when the gate is closed, they prevent the leaf opening movement.

NB: If no opening safety devices are connected, jumper connect inputs OP and -TX FSW (Fig. G).

– - Negative for power supply to accessories

+ - 24 VDC - Positive for power supply to accessories

Important: Accessories max. load is 500 mA. To calculate current draw, refer to the instructions for individual accessories.

-TX FSW - Negative for power supply to photocell transmitters.

If you use this terminal for connecting the negative for supplying power to the photocell transmitters, you may, if necessary, also use the FAIL SAFE function (see *Advanced Programming in Section 13.5.2*).

If this function is enabled, the equipment checks operation of the photocells before each opening or closing cycle.

1.4.5 Terminal Block J5 - Indicator-Light and Electric Lock

W.L. - Power supply to indicator-light

Connect a 24 VDC - 3 W max. indicator-light, if necessary, between this terminal and the +24V supply. To avoid compromising correct operation of the system, **do not exceed** the indicated power.

LOCK - Power supply to electric lock

If necessary, connect a 12 VAC electric strike lock between this terminal and the +24V power supply. Please refer to Chapter 16 for Magnetic Lock connection.

1.4.6 Connector J2 - Rapid Connection to RP Receivers

This is used for rapid connection to RP receivers (see Fig. Q). Connect the accessory with the components side facing the inside of the card. ***Insert and remove with power OFF.***

Figure Q

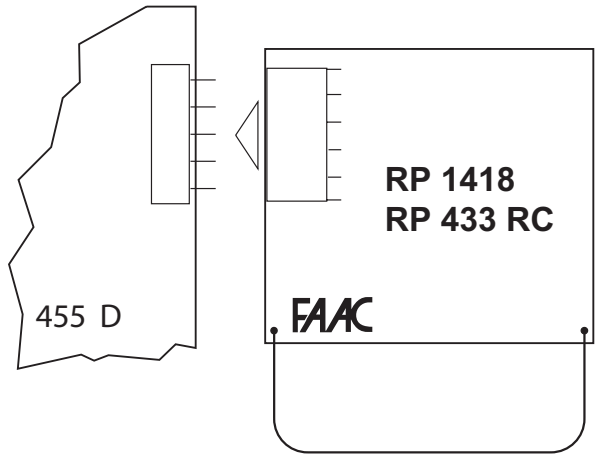

(800) 878-7829 www.FastGateOpeners.com

1.4.7 Terminal Block J6 - Limit-Switch or Gatecoder

These inputs are designed for connection of opening and closing limit-switches or Gatecoders

The 400 operator cannot use limit switches but only Gatecoders. They are used to detect the leaf's angular position and to thus obtain deceleration and stop positions more accurately than using the operating timing.

Please refer to Figure S for wiring information. If the Gatecoders are not used the J6 inputs can be left unconnected.

Figure S

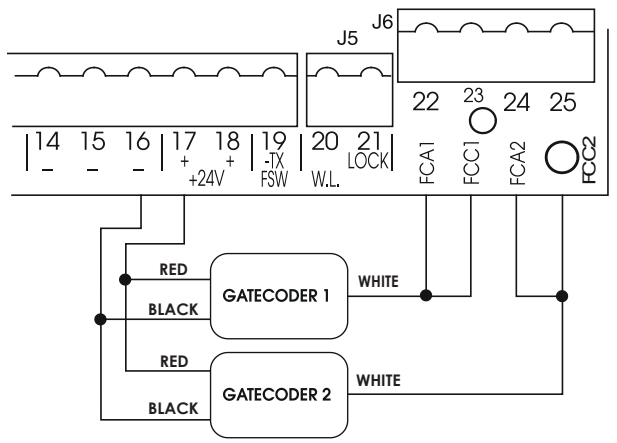

1.4.8 Operating Logics

This is a brief description of the main operating logics of the system. For a complete description please refer to Table 3

- A (automatic): The gate opens on command and automatically closes after a pause phase. A second command while opening is ignored; a second command during the pause phase interrupts the pause time; a second command during closing reopens the gate. A maintained open command will hold the gate open.
- S (security): The security mode is like A logic except that a second command during opening immediately closes the gate. A maintained open command will not hold the gate open.
- E (semi-automatic): This mode requires a second command during opening stops the gate. A second command during closing reopens the gate.
- EP (semi-automatic, step by step): This mode requires a command to open and a command to close. A second command during opening or closing causes the gate to stop. A third command then reverses the previous motion of the gate.
- B (manned, pulsed): This mode is designed for guard station use and requires a three button switch (pulsed) to open, close, and stop the gate.
- C (manned and constant): This mode requires constant pressure switches. One to open and one to close. No pressure on a switch stops the gate.

1.5 Programming

To program the 455D Control Board, you have to access "*PROGRAMMING*" mode. Programming is split into two parts: *BASIC* and *ADVANCED*.

1.5.1 Basic Programming

To access BASIC PROGRAMMING, press key **F**:

- Press and hold **F**, the unit will display the name of the first function / parameter.
- When you release the key, the unit will display the parameter's current value.
- Value can be modified with keys **+** and **-** .
- Press and hold **F** again, the unit will display the name of the next function / parameter.
- When you reach the last function, press **F** to exit the program, the display resumes monitoring input status.

The following table displays the sequence of functions accessible in BASIC PROGRAMMING:

BASIC PROGRAMMING press (F)

Display	Function	Default
LO	***OPERATING LOGICS (see tab. 3/a - h):*** E = *Semi-automatic* A = *Automatic* S = *"Safety" Automatic* EP = *"Stepped" Semi-automatic* AP = *"Stepped" Automatic* SP = *"Safety Stepped" Automatic* b = *"B" Semi-automatic* C = *Dead-man*	E
PA	***PAUSE TIME:*** *This has effect only when automatic logic is selected. Adjustable from 0 to 59 secs. in one-second increments.* *Subsequently, display changes to minutes and tenths of seconds (separated by a decimal point), time is adjusted in 10-second increments, up to 4.1 minutes max. Thus, if the unit displays 2.5, Pause Time is 2 mins. and 50 secs.*	0
F1	***LEAF 1 FORCE:*** *Adjusts thrust of Motor 1.* 1 = *minimum force* 50 = *maximum force (hydraulic)*	25
F2	***LEAF 2 FORCE:*** *Adjusts thrust of Motor 2.* 1 = *minimum force* 50 = *maximum force (hydraulic)*	25
cd	***LEAF 1 CLOSING DELAY:*** *Delays closing start of leaf 1 with respect to leaf 2. Adjustable from 0 to 4.1 minutes (see Pause Time).*	0
tL	***TIME LEARNING (see Section F.3.):*** *Enables the selection between "simple" (automatic) learning and "complete" (manual choice of deceleration and stop points) learning.* ***Simple Learning:*** (+) ***≈ 1 s.*** ***Complete Learning:*** (+) ***> 3 s.***	
In	*Exit from programming and return to inputs status monitoring.*	

If using hydraulic operators, set force to maximum level.

(800) 878-7829 www.FastGateOpeners.com

1.5.2 Advanced Programming

To access ADVANCED PROGRAMMING, press and hold key F and then press key +:

- Release key +, the unit displays the name of the first function.
- Release key F, modify the value of the function with keys + and -.
- Press and hold key F, the unit displays the name of the next function, and if you release it, the value that can be modified with keys + and -.
- When you reach the last function, press F to exit the program, the unit resumes monitoring input status.

The following table shows the sequence of functions accessible in ADVANCED PROGRAMMING:

ADVANCED PROGRAMMING (F) + (+)

Display	Function	Default
bo	***MAXIMUM TORQUE AT INITIAL THRUST:*** *The motors operate at maximum torque (ignoring the torque setting) at start of movement. Useful for heavy leaves.* *4 = Active* *no = Disabled*	no
cS	***LAST STROKE AT CLOSING:*** *The motors are activated at full speed for 1 second to facilitate locking of the electric lock.* *4 = Active* *no=Disabled*	no
rS	***REVERSING STROKE:*** *Before opening, while the gate is closed, the motors thrust to close for 2 seconds thus facilitating release of the electric lock.* *4 = Active* *no = Disabled*	no
od	***LEAF 2 OPENING DELAY (2 s):*** *Enables delayed start (at opening) of leaf 2, avoiding interference between leaves.* *4 = Active* *no = Disabled*	no
FS	***FAIL SAFE:*** *If this function is activated, it enables a function test of the photocells before any gate movement. If the test fails (photocells not serviceable), the gate does not start the movement.* *4 = Active* *no = Disabled*	no
PF	***PRE-FLASHING (5 s):*** *Activates the flashing lamp for 5 seconds before start of movement.* *4 = Active* *no = Disabled*	no
EL	***ELECTRIC LOCK ON LEAF 2:*** *For using the electric lock on leaf 2 instead of on leaf 1.* *4 = Active* *no = Disabled*	no

NB: *Parameter modifications take effect immediately. Exit out of programming to save changes. If the equipment is powered down before returning to normal status monitoring, any unsaved modifications will be lost.*

To restore programming defaults, press and hold the three buttons +, -, F simultaneously for 5 seconds.

Display	Function	Default
SP	***INDICATOR-LIGHT:*** *If 0 is selected, the output functions as a standard indicator-light (lighted at opening and pause, flashing at closing, and off when gate is closed). Different figures correspond to the extra time compared to normal work time (opening or closing) when the output can be used - via a relay - to power a courtesy light. Time can be adjusted from 1 to 59 sec. in 1 sec. steps, and from 1.0 to 4.1 min. in 10 sec. steps.* *0 = Standard indicator-light* *from 1 to 4.1 = Timed output*	0
Ph	***CLOSING PHOTOCELLS REVERSE AT RELEASE:*** *Enable this function if you want the closing photocells to stop movement and reverse at release. Default setting is immediate reverse.* *4 = Active* *no = Disabled*	no
Ad	***A.D.M.A.P. FUNCTION:*** *When enabled, the safety devices operate in compliance with French standard NFP 25/362.* *4 = Active* *no = Disabled*	no
AS	***ASSISTANCE REQUEST (combined with next function):*** *If activated, at the end of countdown (settable with the next function i.e. "Cycle programming") it affects 8 s of pre-flashing at every Open pulse (job request). Can be useful for setting scheduled maintenance jobs.* *4 = Active* *no = Disabled*	no
nC	***CYCLE PROGRAMMING:*** *For setting countdown of system operation cycles. Settable (in thousands) from 0 to 99 thousand cycles. The displayed value is updated as cycles proceed.* *This function can be used to check use of the board or to exploit the "Assistance request".*	0
EC	***ANTI-CRUSHING SENSITIVITY:*** *When operating with the gatecoder, it controls anti-crushing sensitivity.* *4 = Low* *no = High.* ***EXTRA WORK TIME:*** *When operating without a gatecoder and limit-switch, if reversing occurs, and if the leaf does not reach its end contact point, you can activate this function to increase work time.* *4 = Active* *no = Disabled*	no
In	*Exit from programming and return to inputs status monitoring.*	

(800) 878-7829 www.FastGateOpeners.com

1.6 Start-Up

1.6.1 LED Check

The board has a two-digit display. When not in “PROGRAMMING” mode, this display is used to indicate the status of inputs. Fig. U shows how the LED segments of the display exactly correspond to the inputs.

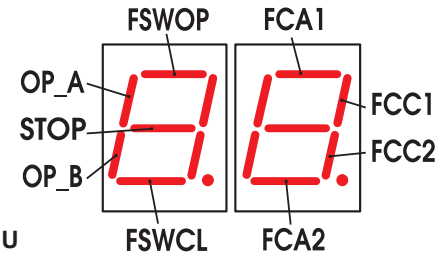

Figure U

The table below shows the status of the LEDs in relation to the status of the inputs.

Note the following: LED ON = closed contact
LED OFF = open contact

Operation of the Status Signaling LEDs

LEDs	ON	OFF
OP_A	Command activated	**Command inactive**
OP_B	Command activated	**Command inactive**
STOP	**Command inactive**	Command activated
FSWCL	**Safety devices clear**	Safety devices triggered
FSWOP	**Safety devices clear**	Safety devices triggered
FCA1 (if used)	Flashes when Gatecoder 1 is in use	
FCC1 (if used)	Flashes when Gatecoder 1 is in use	
FCC2 (if used)	Flashes when Gatecoder 2 is in use	
FCA2 (if used)	Flashes when Gatecoder 2 is in use	

The status of the LEDs while the gate is closed at rest are shown in bold.

1.6.2 Rotation Direction and Force Check

1. Program the functions of the 455 D control board according to need, as previously shown.
2. Cut power to the electronic control equipment.
3. Release the operators and manually move the gate to the mid-point of the opening angle.
4. Re-lock the operators.
5. Restore power.
6. Send and opening command on the OPEN A input (Fig.B) and check if the gate leaves are being commanded to open.

N.B: If the first OPEN A pulse commands a closing, cut power and reverse the phases of the electric motor (red and black wires) on the 455 D control board.

7. Check force setting of the motors, modify if necessary (see *Section 13.5.1*).

N.B: For hydraulic operators, like the 400, force should be programmed to maximum level (50)

8. Stop leaf movement with a STOP command.
9. Release the operators, close the leaves and re-lock the operators.

Make sure travel limit mechanical stops are present.

***WARNING:** During the learning procedure, safety devices are disabled! Avoid crossing the leaf movement area when this operation is carried out.*

1.6.3 Learning Operating Times

Opening/closing time is established by a learning procedure which varies slightly according to whether you are using Gatecoders or not.

13.6.3.1 LEARNING NORMAL TIMES

Normal learning (i.e. without limit-switches and Gatecoders) can be accomplished in two ways:

- SIMPLE LEARNING (Without Slow Down):

Check that the leaves are closed. Enter “*BASIC PROGRAMMING,*” select the TIME LEARNING function and then press the **+** push-button for **1 second**. The display begins flashing and the leaves begin to open.

As soon as the leaves reach the opening contact point, provide an OPEN A pulse (with the key operated push-button or with the radio control) to stop the movement. The leaves stop and the display stops flashing.

Press push-button **F** to exit and save the programming. The procedure is complete and the gate is ready to operate.

- COMPLETE LEARNING (With Slow Down):

Check that the leaves are closed. Enter “*BASIC PROGRAMMING,*” select the TIME LEARNING function and then press the **+** push-button for more than **3 seconds**. The display begins flashing and leaf 1 begins to open. The following functions can be performed by sending OPEN A pulses (by key push-button or radio control):

1° OPEN - Slow down at opening of leaf 1
2° OPEN - Leaf 1 stops at opening and leaf 2 begins its opening movement
3° OPEN - Slow down at opening of leaf 2
4° OPEN - Leaf 2 stops at opening and immediately begins its closing movement
5° OPEN - Slow down at closing of leaf 2
6° OPEN - Leaf 2 stops at closing and leaf 1 begins its closing movement
7° OPEN - Slow down at closing of leaf 1
8° OPEN - Leaf 1 stops at closing

When the display stops flashing, press push-button **F** to exit and save the programming. The procedure is complete and the gate is ready to operate.

Notes:

- *If you wish to eliminate deceleration in certain stages, wait for the leaf to reach its stop-limit and supply 2 consecutive Open pulses (by 1 second).*
- *If only one leaf is present, the entire sequence must nevertheless be effected. When the leaf has finished opening, supply 5 Open pulses until the leaf begins to close, and then resume normal operation.*

1.6.4 Learning Times with Gatecoder

Learning with the Gatecoder can be accomplished in two ways:

- SIMPLE LEARNING (With Slow Down):

Check that the leaves are closed. Access “*BASIC PROGRAMMING,*” select the TIME LEARNING function and then press the **+** push-button for **1 second**: the display begins flashing and the leaves begin the opening movement.

The movement stops automatically when the opening stop limit is reached. The display will stop flashing.

Press push-button **F** to exit and save the programming. The procedure is complete and the gate is ready to operate, using the default slow down set at the factory.

- COMPLETE LEARNING (With Slow Down):

Check that the leaves are closed. Access “*BASIC PROGRAMMING,*” select the TIME LEARNING function and then press the **+** push-button for more than **3 seconds**. The display begins flashing and leaf 1 begins to open. The following functions can be performed by sending OPEN A pulses (by radio control or key push-button):

1° OPEN - Leaf 1 slows down at opening (it stops automatically on reaching the stop limit)

2° OPEN - Leaf 2 opening movement begins

3° OPEN - Leaf 2 slows down at opening (it stops automatically on reaching the stop limit)

4° OPEN - Leaf 2 closing movement begins

5° OPEN - Leaf 2 slows down at closing (it stops automatically on reaching the stop limit)

6° OPEN - Leaf 1 closing movement begins

7° OPEN - Leaf 1 slows down at closing (it stops automatically on reaching the stop limit)

8° OPEN - End of learning

When the display stops flashing, press push-button **F** to exit and save the programming. The procedure is complete and the gate is ready to operate.

Notes:

- *The slow down pulse should be given before the gate reaches the positive stop to prevent the leaf from hitting it at full speed (it would be mistaken for an obstacle).*
- *If only one leaf is present, the entire sequence must nevertheless be effected. When the leaf has finished opening, supply 5 Open pulses until the leaf begins to close, and then resume normal operation.*

1.7 System Test

When you are finished programming, test the system. Verify that the entire system operates correctly. Most importantly, check that force is adequately adjusted and that safety devices are operating correctly.

(800) 878-7829 www.FastGateOpeners.com

2. OPERATING MODES DETAILED DESCRIPTION

Tab. 3/a

Logic "E"	PULSES					
GATE STATUS	OPEN-A	OPEN-B	STOP	OPENING SAFETY DEVICES	CLOSING SAFETY DEVICES	OP/CL SAFETY DEVICE
CLOSED	Opens the leaf	Opens single leaf	No effect (OPEN disabled)		No effect	No effect (OPEN disabled)
OPEN	Re-closes the leaf immediately (3)			No effect (if on part.opng. OPEN A disabled)	No effect (3) (OPEN disabled)	No effect (OPEN disabled)
CLOSING	Re-opens the leaf immediately		Stops operation	No effect (saves OPEN)	see paragraph 5.2.	Locks and, on release, reverses to open
OPENING	Stops operation (3)			Reverses to close	No effect	Locks and, on release, continues opening
LOCKED	Closes the leaf (with Closing Safety devices engaged, opens at the 2nd pulse) (3)		No effect (OPEN disabled)	No effect		No effect (OPEN disabled)

Tab. 3/b

Logic "A"	PULSES					
GATE STATUS	OPEN-A	OPEN-B	STOP	OPENING SAFETY DEVICES	CLOSING SAFETY DEVICES	OP/CL SAFETY DEVICE
CLOSED	Opens the leaf and closes it after pause time (1)	Opens single leaf and closes after pause time (1)	No effect (OPEN disabled)		No effect	No effect (OPEN disabled)
OPEN on PAUSE	Reloads pause time (1)(3)			No effect (if on part.opng. OPEN A disabled)	Reloads pause time (1) (3)	Reloads pause time (1) (OPEN disabled)
CLOSING	Re-opens the leaf immediately (1)		Stops operation	No effect (saves OPEN)	see paragraph 5.2.	Locks and, on release, reverses to open
OPENING	No effect (1) (3)			Reverses to close	No effect	Locks and, on release, continues opening
LOCKED	Closes the leaf (3)		No effect (OPEN disabled)	No effect		No effect (OPEN disabled)

Tab. 3/c

Logic "S"	PULSES					
GATE STATUS	OPEN-A	OPEN-B	STOP	OPENING SAFETY DEVICES	CLOSING SAFETY DEVICES	OP/CL SAFETY DEVICE
CLOSED	Opens the leaf and closes it after pause time	Opens single leaf and closes after pause time	No effect (OPEN disabled)		No effect	No effect (OPEN disabled)
OPEN on PAUSE	Re-closes the leaf immediately (3)			No effect (if on part.opng. OPEN A disabled)	On release, closes after 5" (OPEN disabled) (3)	On release, closes after 5" (OPEN disabled)
CLOSING	Re-opens the leaf immediately		Stops operation	No effect (saves OPEN)	see paragraph 5.2.	Locks and, on release, reverses to open
OPENING	Re-closes the leaf immediately (3)			Reverses to close	No effect (saves OPEN)	Locks and, on release, continues opening
LOCKED	Closes the leaf (3)		No effect (OPEN disabled)	No effect		No effect OPEN disabled)

Tab. 3/d

Logic "EP"	PULSES					
GATE STATUS	OPEN-A	OPEN-B	STOP	OPENING SAFETY DEVICES	CLOSING SAFETY DEVICES	OP/CL SAFETY DEVICE
CLOSED	Opens the leaf	Opens leaf for the partial opening time	No effect (OPEN disabled)		No effect	No effect (OPEN disabled)
OPEN	Re-closes the leaf immediately (3)			No effect (if on part.opng. OPEN A disabled)	No effect (OPEN disabled) (3)	No effect (OPEN disabled)
CLOSING	Stops operation		Stops operation	No effect (saves OPEN)	see paragraph 5.2.	Locks and, on release, reverses to open
OPENING	Stops operation (3)			see paragraph 5.2.	No effect	Locks and, on release, continues opening
LOCKED	Restarts movement in reverse direction (3) (always closes after a Stop)		No effect (OPEN disabled)	No effect (if it must open, it disables OPEN)	No effect (if it must close, it disables OPEN)	No effect (OPEN disabled)

(1) If maintained, it prolongs the pause until disabled by the command (timer function)

(2) If a new pulse occurs within 2 seconds after reversing, it immediately stops operation.

(3) During the partial opening cycle, an OPEN A pulse causes total opening.

NB.: Effects on other active pulse inputs in brackets.

(800) 878-7829 www.FastGateOpeners.com

Tab. 3/e

Logic "AP"	PULSES					
GATE STATUS	OPEN-A	OPEN-B	STOP	OPENING SAFETY DEVICES	CLOSING SAFETY DEVICES	OP/CL SAFETY DEVICE
CLOSED	Opens the leaf and closes it after pause time	Opens single leaf and closes after pause time	No effect (OPEN disabled)		No effect	No effect (OPEN disabled)
OPEN on PAUSE	Stops operation (3)		Stops operation	No effect (if on part.opng. OPEN A disabled)	Reloads pause time (3) (OPEN disabled)	Reloads pause time (OPEN disabled)
CLOSING	Re-opens the leaf immediately			No effect (saves OPEN)	see paragraph 5.2.	Locks and, on release, reverses to open
OPENING	Stops operation (3)			Reverses to close	No effect	Locks and, on release, continues opening
LOCKED	Closes the leaf (with Closing Safety devices engaged, opens at the 2nd pulse) (3)		No effect (OPEN disabled)	No effect		No effect (OPEN disabled)

Tab. 3/f

Logic "SP"	PULSES					
GATE STATUS	OPEN-A	OPEN-B	STOP	OPENING SAFETY DEVICES	CLOSING SAFETY DEVICES	OP/CL SAFETY DEVICE
CLOSED	Opens the leaf and closes it after pause time	Opens single leaf and closes after pause time	No effect (OPEN disabled)		No effect	No effect (OPEN disabled)
OPEN on PAUSE	Stops operation (3)		Stops operation	No effect (if on part.opng. OPEN A disabled)	On release, closes after 5" (OPEN disabled) (3)	On release, closes after 5" (OPEN disabled)
CLOSING	Re-opens the leaf immediately			No effect (saves OPEN)	see paragraph 5.2.	Locks and, on release, reverses to open
OPENING	Stops operation (3)			Reverses to close	No effect (saves OPEN)	Locks and, on release, continues opening
LOCKED	Closes the leaf (3)		No effect (OPEN disabled)	No effect		No effect OPEN disabled)

Tab. 3/g

Logic "B"	PULSES					
GATE STATUS	OPEN-A (opening)	OPEN-B (closing)	STOP	OPENING SAFETY DEVICES	CLOSING SAFETY DEVICES	OP/CL SAFETY DEVICE
CLOSED	Opens the leaf	No effect	No effect (OPEN A disabled)		No effect	No effect (OPEN A disabled)
OPEN	No effect	Closes the leaf	No effect (OPEN B disabled)	No effect	No effect (OPEN B disabled)	No effect (OPEN B disabled)
CLOSING	Reverses to open	No effect	Stops operation	No effect (saves OPEN A)	Stops operation (OPEN-B disabled)	Stops operation (OPEN-A/B disabled)
OPENING	No effect	No effect		Stops operation (OPEN-A disabled)	No effect	
LOCKED	Opens the leaf	Closes the leaf	No effect (OPEN A/B disabled)	No effect (OPEN-A disabled)	No effect (OPEN B disabled)	No effect (OPEN A/B disabled)

Tab. 3/h

Logic "C"	CONTROLS ALWAYS HELD DOWN		PULSES			
GATE STATUS	OPEN-A (opening)	OPEN-B (closing)	STOP	OPENING SAFETY DEVICES	CLOSING SAFETY DEVICES	OP/CL SAFETY DEVICE
CLOSED	Opens the leaf	No effect (OPEN-A disabled)	No effect (OPEN A disabled)		No effect	No effect (OPEN A disabled)
OPEN	No effect (OPEN-B disabled)	Closes the leaf	No effect (OPEN-A/B disabled)	No effect (OPEN A disabled)	No effect (OPEN B disabled)	No effect (OPEN B disabled)
CLOSING	Stops operation	/	Stops operation	No effect	Stops operation (OPEN-B disabled)	Stops operation (OPEN-A/B disabled)
OPENING	/	Stops operation		Stops operation (OPEN-A disabled)	No effect	

(1) If maintained, it prolongs the pause until disabled by the command (timer function)

(2) If a new pulse occurs within 2 seconds after reversing, it immediately stops operation.

(3) During the partial opening cycle, an OPEN A pulse causes total opening.

NB.: Effects on other active pulse inputs in brackets.

(800) 878-7829 www.FastGateOpeners.com

3. PREWIRED ENCLOSURE DIAGRAM

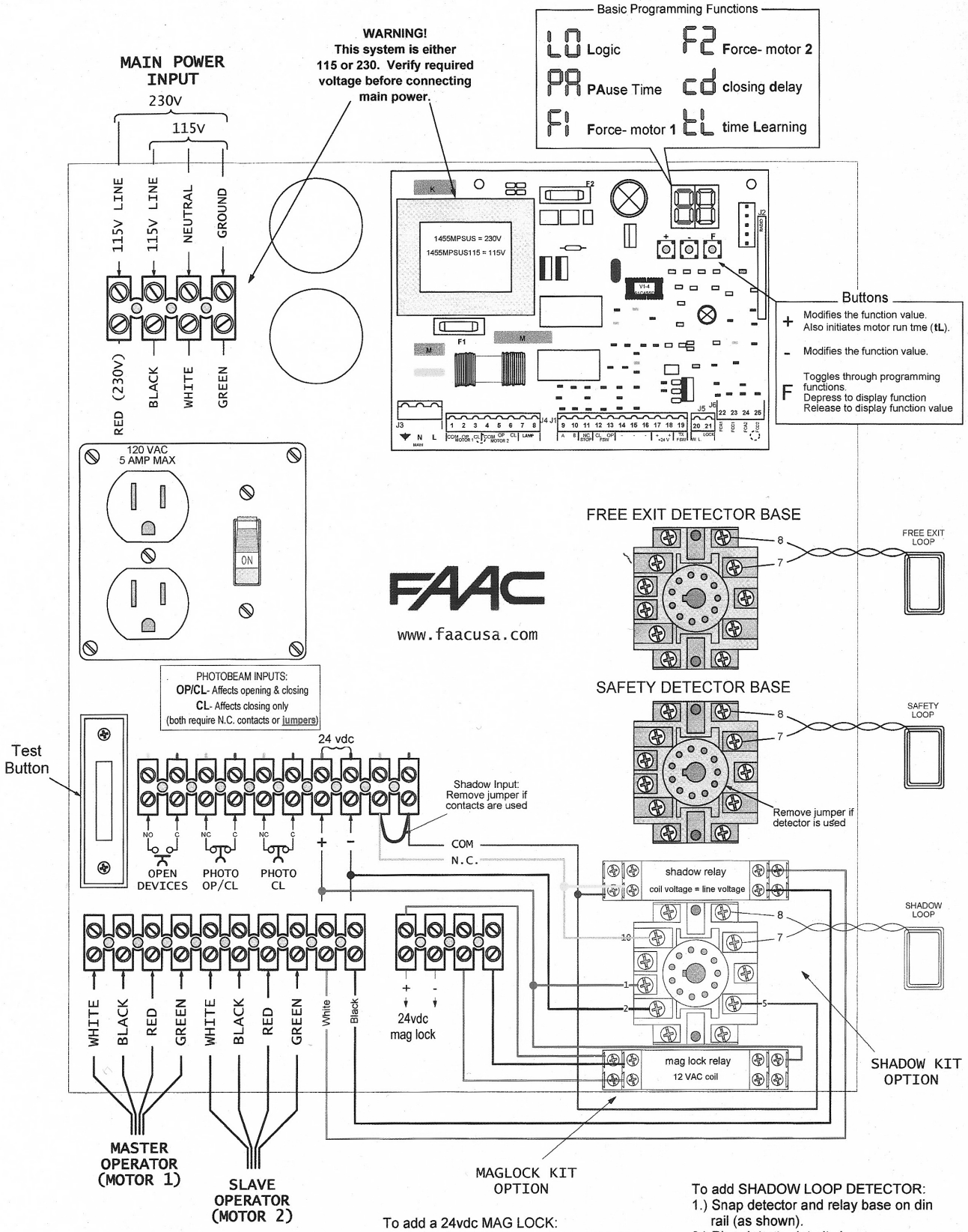

rev 2.0 Jan-08

4. POWER AND ACCESSORIES CONNECTIONS

AC Power Wiring Guidelines

1. Check local wiring codes in all cases and follow all local building codes. Wiring and hookup should be performed by qualified electricians/installers only.
2. AC power should be supplied from a circuit breaker panel and must have its own dedicated circuit breaker. This supply must include a green ground conductor.
3. Properly ground the gate operator to minimize or prevent damage from power surges and/or lightning. Use a grounding rod if necessary. A surge suppressor is recommended for additional protection.

AC Power Connection

1. Turn the circuit breaker for the AC gate operator power to OFF before connecting the AC input wires.
2. Turn the Power Switch located on the left side of the prewired enclosure to OFF before connecting the AC input wires.
3. Connect the AC input wires to the AC terminal located on the top left of the enclosure. See diagram on the right.

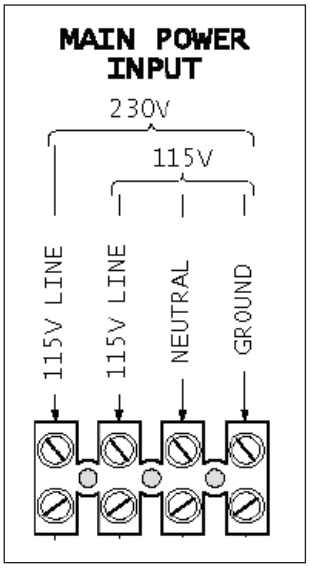

Magnetic Lock Connection

When connecting a magnetic lock to the system, use Maglock Relay Kit (P/N: 2352) and connect it as follows:

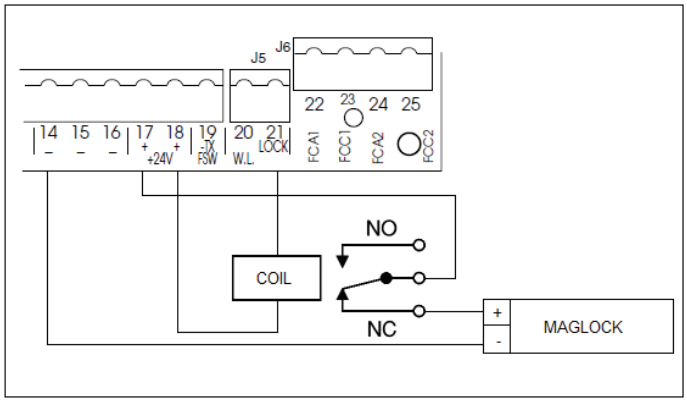

LIMITED WARRANTY

To the original purchaser only:

FAAC International, Inc., warrants, for twenty-four (24) months from the date of invoice, the gate operator systems and other related systems and equipment manufactured by FAAC S.p.A. and distributed by FAAC International, Inc., to be free from defects in material and workmanship under normal use and service for which it was intended provided it has been properly installed and operated.

FAAC International, Inc.'s obligations under this warranty shall be limited to the repair or exchange of any part of parts manufactured by FAAC S.p.A. and distributed by FAAC International, Inc. Defective products must be returned to FAAC International, Inc., freight prepaid by purchaser, within the warranty period. Items returned will be repaired or replaced, at FAAC International, Inc.'s option, upon an examination of the product by FAAC International, Inc., which discloses, to the satisfaction of FAAC International, Inc., that the item is defective. FAAC International, Inc. will return the warranted item freight prepaid. The products manufactured by FAAC S.p.A. and distributed by FAAC International, Inc., are not warranted to meet the specific requirements, if any, of safety codes of any particular state, municipality, or other jurisdiction, and neither FAAC S.p.A. or FAAC International, Inc., assume any risk or liability whatsoever resulting from the use thereof, whether used singly or in combination with other machines or apparatus.

Any products and parts not manufactured by FAAC S.p.A. and distributed by FAAC International, Inc., will carry only the warranty, if any, of the manufacturer. This warranty shall not apply to any products or parts thereof which have been repaired or altered, without FAAC International, Inc.'s written consent, outside of FAAC International, Inc.'s workshop, or altered in any way so as, in the judgment of FAAC International, Inc., to affect adversely the stability or reliability of the product(s) or has been subject to misuse, negligence, or accident, or has not been operated in accordance with FAAC International, Inc.'s or FAAC S.p.A.'s instructions or has been operated under conditions more severe than, or otherwise exceeding, those set forth in the specifications for such product(s). Neither FAAC S.p.A. nor FAAC International, Inc., shall be liable for any loss or damage whatsoever resulting, directly or indirectly, from the use or loss of use of the product(s). Without limiting the foregoing, this exclusion from liability embraces a purchaser's expenses for downtime or for making up downtime, damages for which the purchaser may be liable to other persons, damages to property, and injury to or death of any persons.

FAAC S.p.A. or FAAC International, Inc., neither assumes nor authorizes any person to assume for them any other liability in connection with the sale or use of the products of FAAC S.p.A. or FAAC International, Inc. The warranty herein above set forth shall not be deemed to cover maintenance parts, including, but not limited to, hydraulic oil, filters, or the like. No agreement to replace or repair shall constitute an admission by FAAC S.p.A. or FAAC International, Inc., of any legal responsibility to effect such replacement, to make such repair, or otherwise. This limited warranty extends only to wholesale customers who buy directly through FAAC International, Inc.'s normal distribution channels. FAAC International, Inc., does not warrant its products to end consumers.

Consumers must inquire from their selling dealer as to the nature and extent of that dealer's warranty, if any. This warranty is expressly in lieu of all other warranties expressed or implied including the warranties of merchantability and fitness for use. This warranty shall not apply to products or any part thereof which have been subject to accident, negligence, alteration, abuse, or misuse or if damage was due to improper installation or use of improper power source, or if damage was caused by fire, flood, lightning, electrical power surge, explosion, wind storm, hail, aircraft or vehicles, vandalism, riot or civil commotion, or acts of God.

(800) 878-7829 www.FastGateOpeners.com