Nice

WIDE S
WIDE M
WIDE L

Electromechanical road barrier

EN - Instructions and warnings for installation and use

Nice

ENGLISH

Translation of the original instructions in full

CONTENTS

1 GENERAL SAFETY WARNINGS AND PRECAUTIONS 2
1.1 General warnings 2
1.2 Installation warnings 3
2 PRODUCT DESCRIPTION AND INTENDED USE 3
2.1 List of constituent parts. 4
3 INSTALLATION. 4
3.1 Pre-installation checks 4
3.2 Product usage limits 4
3.2.1 Product durability. 4
3.3 Product identification and overall dimensions 5
3.4 RECEIPT OF THE PRODUCT 6
3.5 Pre-installation works 7
3.6 Adjusting the boom gate. 8
3.7 Installing the gearmotor. 10
3.8 Installing the boom 11
3.9 Adjusting the mechanical limit switches. 12
3.10 Boom balancing 13
3.11 Manually unlocking and locking the gearmotor 13
4 ELECTRICAL CONNECTIONS 14
4.1 Preliminary checks 14
4.2 Wiring diagram and description of connections. 15
4.2.1 Wiring diagram. 15
4.2.2 Description of connections. 17
5 FINAL CHECKS AND START-UP. 17
5.1 Power supply connection 17
6 FINAL CHECKS AND START-UP. 18
5.2 Adjustment of the mechanical stop positions 18
5.3 Checking the boom's movement. 18
7 TESTING AND COMMISSIONING. 19
6.1 Testing 19
6.2 Commissioning. 20
8 PROGRAMMING 21
7.1 Adjusting the trimmers 21
7.2 ALT input and mechanical stop positions learning 22
7.3 Programming the control unit 22
7.4 Memorising the transmitters 24
7.4.1 Procedure for memorising transmitter buttons 24
7.4.2 Number of transmitters that can be memorised 24
7.4.3 Transmitter memorisation and deletion procedures. 25
7.5 LOCKING AND UNLOCKING THE MEMORY 26
7.6 Special functions. 26
7.6.1 "Move anyway" function. 26
7.6.2 "Maintenance notice" function 26
7.6.3 Verifying the number of manoeuvres completed 26
7.6.4 Manoeuvre counter resetting 26
9 TROUBLESHOOTING GUIDE 27
8.1 Troubleshooting 27
8.2 Signals on the control unit. 28
10 FURTHER DETAILS (Accessories) 29
9.1 Connecting an SM-type radio receiver 29
9.2 Connecting and installing the back-up battery. 29
9.3 Connecting the Oview programmer. 30
9.4 Connecting the boom lights (optional accessory) 31
9.4.1 Photocells 32
11 PRODUCT MAINTENANCE. 33
12 PRODUCT DISPOSAL 33
13 TECHNICAL SPECIFICATIONS. 34
14 CONFORMITY 36
INSTRUCTIONS AND WARNINGS FOR THE USER. 37
MAINTENANCE SCHEDULE (to be handed to the end user). 39

1 GENERAL SAFETY WARNINGS AND PRECAUTIONS

1.1 GENERAL WARNINGS

WARNING! Important safety instructions. Observe all the instructions as improper installation may cause serious damages.

WARNING! Important safety instructions. It is important to comply with these instructions to ensure personal safety. Store these instructions carefully.

According to the latest European legislation, an automated device must be constructed in conformity to the harmonised rules specified in the current Machinery Directive, which allow for declaring the presumed conformity of the automation. Consequently, all the operations for connecting the product to the mains electricity, its commissioning and maintenance must be carried out exclusively by a qualified and expert technician.

In order to avoid any danger from inadvertent resetting of the thermal cut-off device, this appliance must not be powered through an external switching device, such as a timer, or connected to a supply that is regularly powered or switched off by the circuit.

WARNING! Please abide by the following warnings:

- Before commencing the installation, check the "Product technical specifications", in particular whether this product is suitable for automating your guided part. Should it not be suitable, do NOT proceed with the installation.
- The product cannot be used before it has been commissioned as specified in the "Testing and commissioning" chapter.
- Before proceeding with the product's installation, check that all the materials are in good working order and suited to the intended applications.
- The product is not intended for use by persons (including children) with reduced physical, sensory or mental capacities, nor by anyone lacking sufficient experience or familiarity with the product.
- Children must not play with the appliance.
- Do not allow children to play with the product's control devices. Keep the remote controls out of reach of children.
- The system's power supply network must include a disconnection device (not supplied) with a contact opening gap permitting complete disconnection under the conditions envisaged by Overvoltage Category III.
- During the installation process, handle the product with care by avoiding crushing, impacts, falls or contact with liquids of any kind. Do not place the product near sources of heat nor expose it to open flames. All these actions can damage the product and cause it to malfunction, or lead to dangerous situations. Should this occur, immediately suspend the installation process and contact the Technical Assistance Service.

- The manufacturer declines all liability for damages to property, objects or people resulting from failure to observe the assembly instructions. In such cases, the warranty for material defects shall not apply.
- The weighted sound pressure level of the emission A is lower than 70 dB(A).
- Cleaning and maintenance reserved for the user must not be carried out by unsupervised children.
- Before intervening on the system (maintenance, cleaning), always disconnect the product from the mains power supply and from any batteries.
- Inspect the system frequently, in particular the cables, springs and supports to detect any imbalances and signs of wear or damage. Do not use the product if it needs to be repaired or adjusted, because defective installation or incorrect balancing of the automation can lead to injuries.
- The packing materials of the product must be disposed of in compliance with local regulations.
- Keep persons away from the gate when it is manoeuvred using the control elements.
- When operating the gate, keep an eye on the automated mechanism and keep all bystanders at a safe distance until the movement has been completed.
- Do not operate the product if anyone is working nearby; disconnect its power supply before permitting such work to be done.

1.2 INSTALLATION WARNINGS

- Prior to installing the drive motor, check that all mechanical components are in good working order and properly balanced, and that the automation can be manoeuvred correctly.
- Make sure that the control elements are kept far from moving parts but nonetheless directly within sight. Unless a selector is used, the control elements must be installed at least 1.5 m above the ground and must not be accessible.
- If the opening movement is controlled by a fire-sensing system, make sure that any windows larger than 200 mm are closed using the control elements.
- Prevent and avoid any form of entrapment between the moving and fixed parts during the manoeuvres.
- Permanently affix the label concerning the manual manoeuvre near its actuating element.
- After installing the drive motor, make sure that the mechanism, protective system and all manual manoeuvres function properly.

2 PRODUCT DESCRIPTION AND INTENDED USE

WIDE are electromechanical road barrier mechanisms for residential, public and industrial use, which control the opening and closing of a driveway.
These barriers are equipped with an electromechanical gearmotor with a 24 V motor.
The control unit is configured for connection to devices belonging to the Opera System **Nice**.
The barriers work on electricity and in case of a power outage (blackout), the boom can be unlocked manually and moved by hand. Alternatively, it is possible to use the back-up battery (model PS324 - optional accessory) which ensures that certain manoeuvres can be carried out in the first few hours of a power outage.
The barriers must be combined with the available booms, individually or in pairs, to reach the desired length. Various optional accessories are available, depending on the chosen boom, as shown in the table.

Table 1

INSTALLABLE ACCESSORIES						
Cubicle	**WIDE S**		**WIDE M**	**WIDE L**		
Boom	3 m	4 m	4 m	5 m	3+3 m	3+4 m
Rubber	yes	yes	yes	yes	yes	yes
Lights	yes	yes	yes	yes	yes	yes
Pivoting attachment	yes	yes	yes	-	-	-
Jointed boom	-	-	yes	-	-	-
Aluminium skirt	1 pcs	-	2 pcs	2 pcs	2 pcs	-
Mobile support	-	-	1 pcs	1 pcs	1 pcs	-

Important notes for using the manual:
- throughout this manual, the term "boom gate" refers to the three products "**WIDE S**", "**WIDE M**" and "**WIDE L**"
- the accessories mentioned in the manual are optional.

Any use of the product other than the intended use described is not allowed!

2.1 LIST OF CONSTITUENT PARTS

"***Figure 1***" shows the main parts making up the **WIDE**.

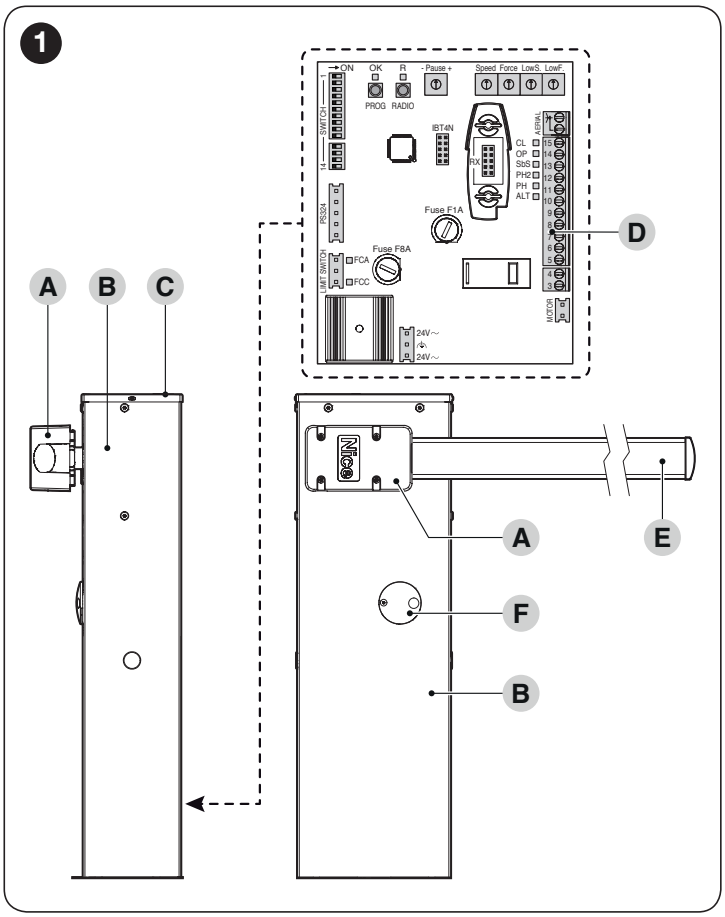

A Boom support
B Gearmotor containment box
C Cover
D Electronic control and command unit
E Boom
F Locking/unlocking key

3 INSTALLATION

3.1 PRE-INSTALLATION CHECKS

The installation must be carried out by qualified personnel in compliance with the current legislation, standards and regulations, and with the instructions provided in this manual.

Before proceeding with the product's installation, it is necessary to:
- check the integrity of the supply
- check that all the materials are in good working order and suited to the intended use
- check whether it is possible to observe the operating limits specified in the paragraph "***Product usage limits***"
- check that the installation location is compatible with the overall clearance of the product (see "***Figure 3***")
- check that the surface chosen for installing the boom gate is solid and can ensure stable anchorage
- make sure that the installation area is not subject to flooding; if necessary, the product must be installed appropriately raised above ground level
- check that the space surrounding the boom gate allows for executing the manual manoeuvres easily and safely
- check that there are no obstacles along the boom's path capable of hampering the opening and closing manoeuvres
- check that each device to be installed lies in a position that is protected against the risk of accidental impact.
- verify that the mounting positions of the various devices are protected against impacts and that the mounting surfaces are sufficiently sturdy
- prevent any parts of the automation from being immersed in water or other liquids
- keep the product away from heat sources and open flames and acid, saline or potentially explosive atmospheres; these may damage the product and cause malfunctions or dangerous situations
- connect the control unit to an electricity supply line equipped with a safety earthing system

3.2 PRODUCT USAGE LIMITS

Before proceeding with the product's installation, it is necessary to:
- check that all the values appearing in the "***TECHNICAL SPECIFICATIONS***" chapter are compatible with the intended use
- check that the estimated durability (refer to the paragraph "***Product durability***") is compatible with the intended use
- check that all limitations, conditions and warnings appearing in this manual can be fully observed.

3.2.1 Product durability

The product's durability is its average economic life value and is strongly influenced by the degree of severity of the manoeuvres: in other words, the sum of all factors that contribute to product wear. To estimate the durability of your automated device, proceed as follows:

1. add the values of the items in "***Table 2***" relative to the system's conditions

2. in the graph shown in "***Figure 2***", from the value obtained above, trace a vertical line until it intersects the curve; then, trace a horizontal line until it intersects the line of the "manoeuvre cycles". The value obtained is the estimated lifetime of your product.

The durability values shown in the graph can only be obtained if the maintenance schedule is strictly observed – see the "***PRODUCT MAINTENANCE***" chapter. The durability is estimated on the basis of the design calculations and the results of tests effected on prototypes. Being an estimate, therefore, it offers no explicit guarantee of the product's actual useful life.

Example of durability calculation: WIDE M with mobile support, jointed boom

"***Table 2***" shows the "severity indices" for this type of installation: 15% ("mobile support"), 15% ("jointed boom").

These indicators must be added together to obtain the overall severity index, which in this case is 30%. With the value calculated (30%), identify along the graph's horizontal axis ("severity index") the value corresponding to the number of "manoeuvre cycles" that the product can perform throughout its lifetime = roughly 200.000 cycles.

Table 2

PRODUCT DURABILITY			
	Severity index		
	WIDE S	WIDE M	WIDE L
Jointed boom	/	15%	/
Presence of dust and sand	10%	10%	10%
Presence of salinity	10%	10%	10%
Aluminium skirt	5%	5%	5%
Mobile support	/	15%	15%
Ambient temperature above 40°C or below 0°C	5%	5%	5%
Manoeuvre interrupted by photocell	10%	15%	15%
Manoeuvre interrupted by Stop	10%	15%	15%
Speed setting (trimmer FL) above 50%	10%	10%	15%
Force setting (trimmer I) above 50%	5%	10%	10%

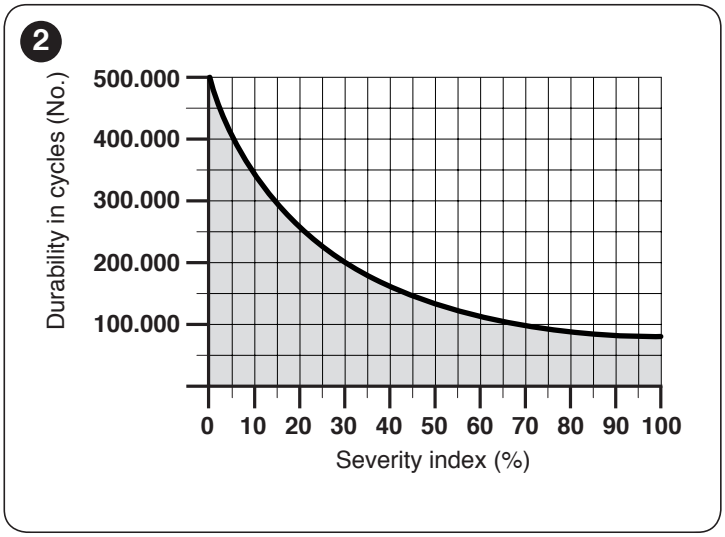

3.3 PRODUCT IDENTIFICATION AND OVERALL DIMENSIONS

The overall dimensions and the label (**A**), which allows for identifying the product, are shown in "***Figure 3***".

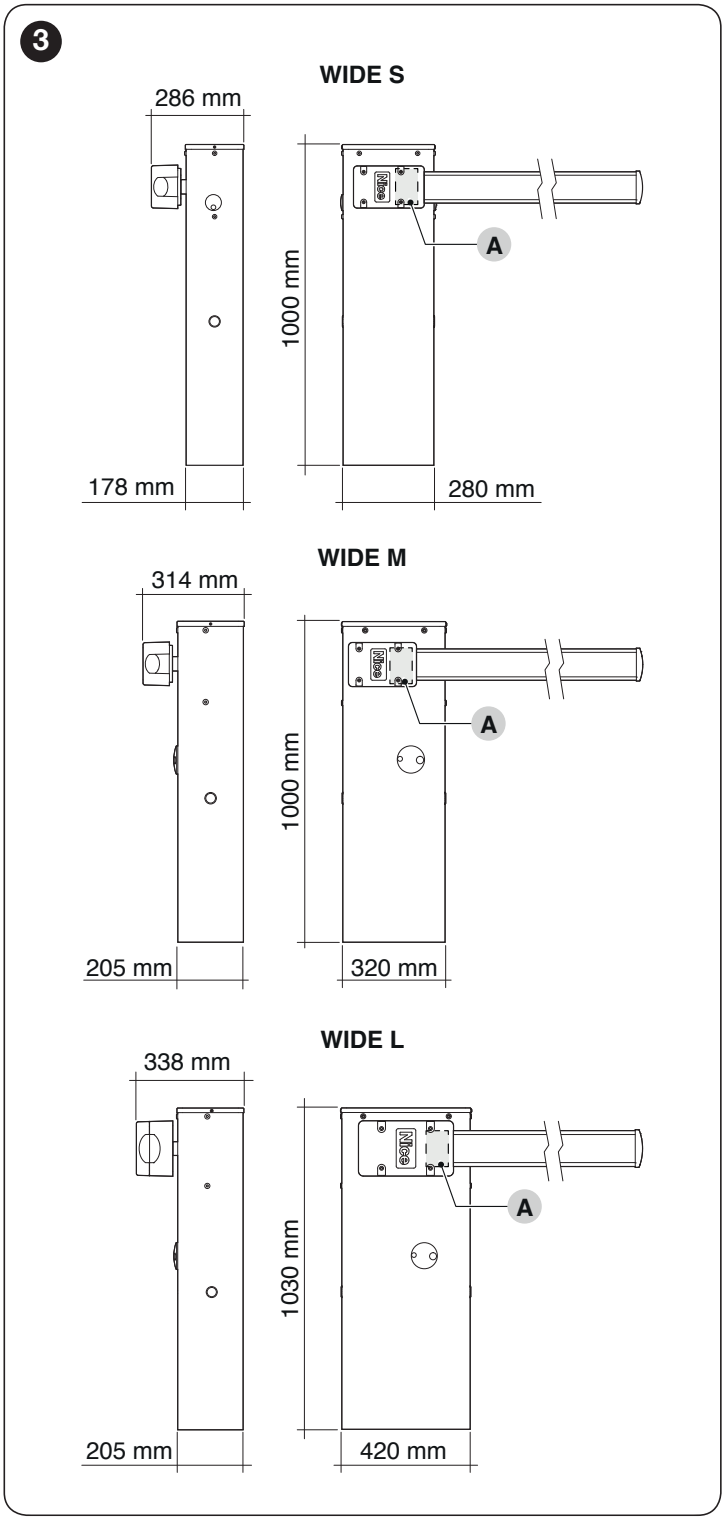

3.4 RECEIPT OF THE PRODUCT

All the components contained in the product's packaging are illustrated and listed below.

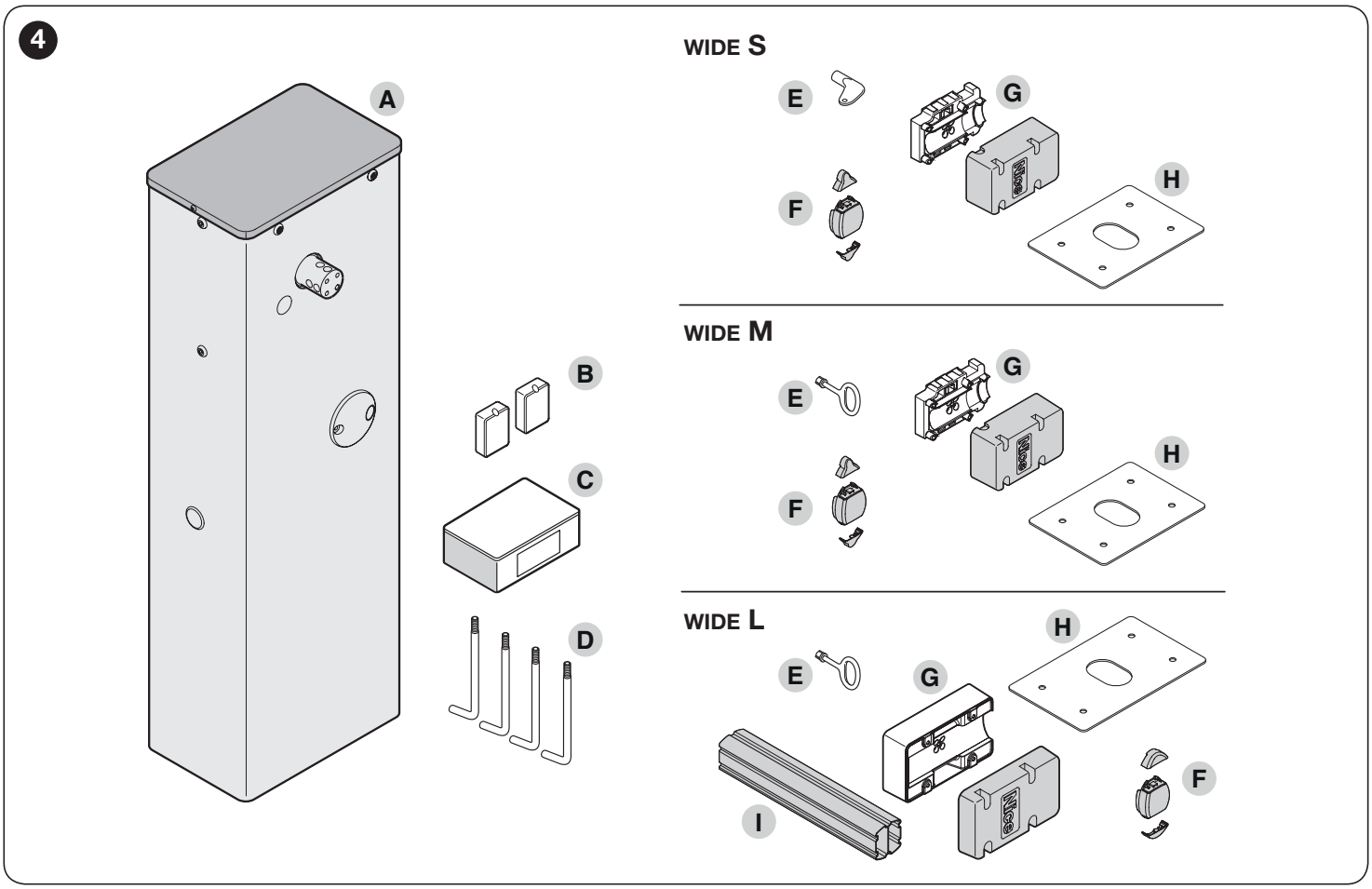

A Boom gate with integrated control unit
B 2 photocell boxes
C Metal hardware (screws, washers, etc.)
D 4 anchor bolts
E Keys for manually locking and unlocking the boom
F Fixed boom cap; 2 connectors for rubber impact protectors
G Boom cover and support
H Foundation plate
I Boom connector (only present on **WIDE L**)

3.5 PRE-INSTALLATION WORKS

The figure shows an example of an automation system, constructed using **Nice** components.

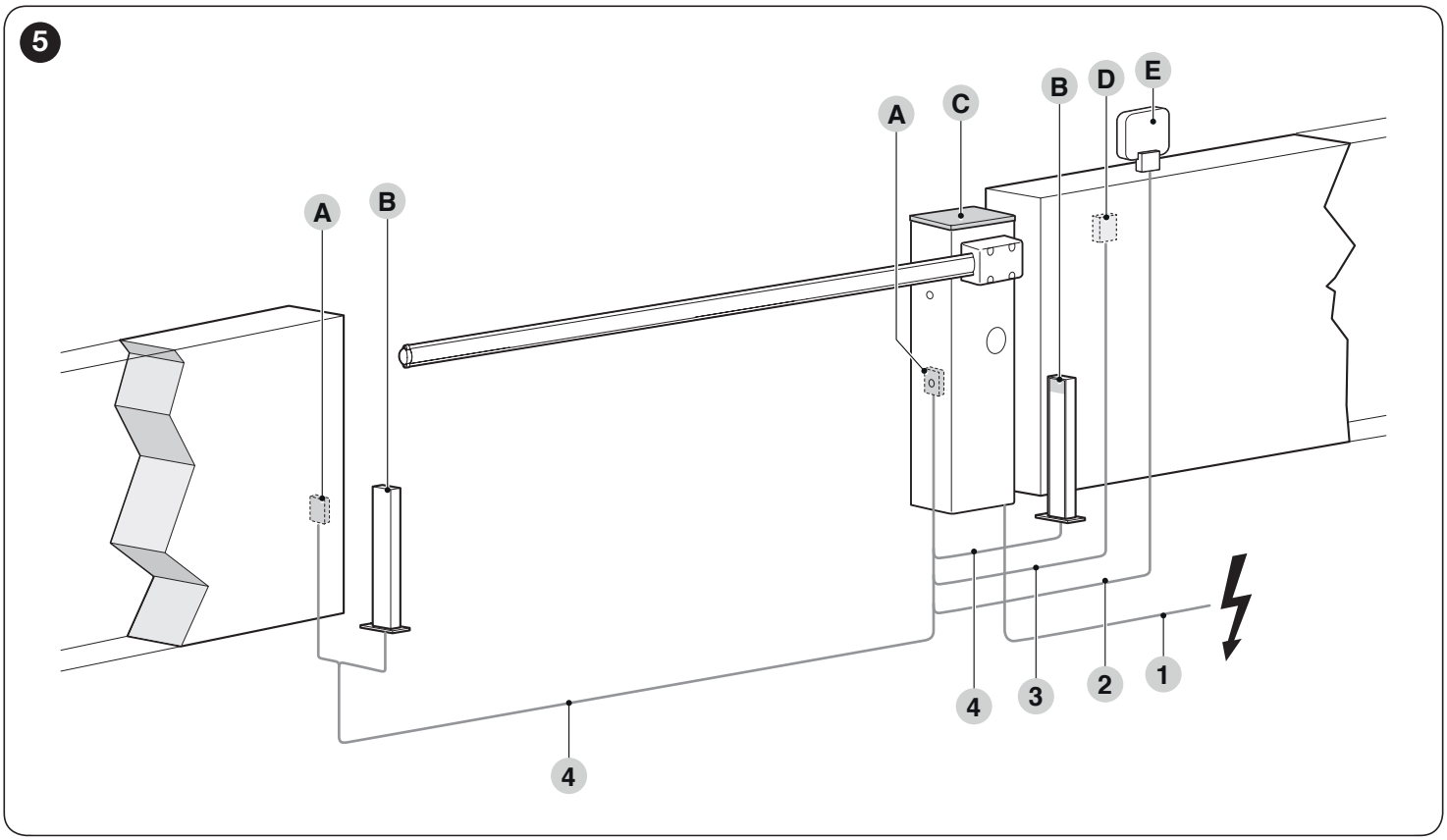

A Photocells
B Photocells on column
C Boom gate cubicle
D Key selector
E Warning light

Table 3

TECHNICAL SPECIFICATIONS OF ELECTRICAL CABLES	
Identification no.	**Cable characteristics**
1	GEARMOTOR POWER SUPPLY cable 1 cable 3 x 1.5 mm² Maximum length 30 m [**note 1**]
2	WARNING LIGHT cable [**note 4**] 1 cable 2 x 0.5 mm² Maximum length 30 m
3	KEY SELECTOR cable 2 cables 2 x 0.25 mm² [**note 3**] Maximum length 30 m
4	PHOTOCELL cable 1 cable 2 x 0.25 mm² (TX) 1 cable 4 x 0.25 mm² (RX) Maximum length 30 m [**note 2**]
Other cables	OPEN INPUT cable 1 cable 2 x 0.25 mm² Maximum length 30 m
	CLOSE INPUT cable 2 x 0.25 mm² Maximum length 30 m
	ANTENNA cable 1 x RG58-type shielded cable Maximum length 15 m; recommended < 5 m
	OPEN BOOM INDICATOR cable [**note 4**] 1 cable 2 x 0.5 mm² Maximum length 30 m
	BOOM LIGHTS cable [**note 4**]

The above-mentioned components are positioned according to a typical standard layout. Using the layout in "***Figure 5***" as a reference, define the approximate position in which each component of the system will be installed.

Note 1 If the power supply cable is longer than 30 m, a cable with larger cross-sectional area (3 x 2.5 mm²) must be used and a safety earthing system must be installed near the automation.

Note 2 If the cable is longer then 30 m, up to maximum 40 m, it is necessary to use a cable with a greater cross-sectional area (2 x 1 mm²).

Note 3 These two cables can be replaced by a single 4 x 0.5 mm² cable.

Note 4 Before making the connection, verify that the output is programmed on the basis of the device to be connected (refer to the chapter "***PROGRAMMING***").

The cables used must be suited to the type of environment of the installation site.

When laying the pipes for routing the electrical cables, take into account that any water deposits in the junction boxes may cause the connection pipes to form condensate inside the control unit, thus damaging the electronic circuits.

Before proceeding with the installation, prepare the required electrical cables by referring to "*Figure 5*" and to that stated in the "*TECHNICAL SPECIFICATIONS*" chapter.

3.6 ADJUSTING THE BOOM GATE

The boom gate is factory-set in the following way:
- balancing spring fastened to the right, anchored through non-permanent holes
- closing manoeuvre of the boom towards the left.

To move the spring attachment, proceed as explained below:

1. remove the upper cover (**A**) of the boom gate cubicle

2. slide out the rear panel first towards the other and then outwards

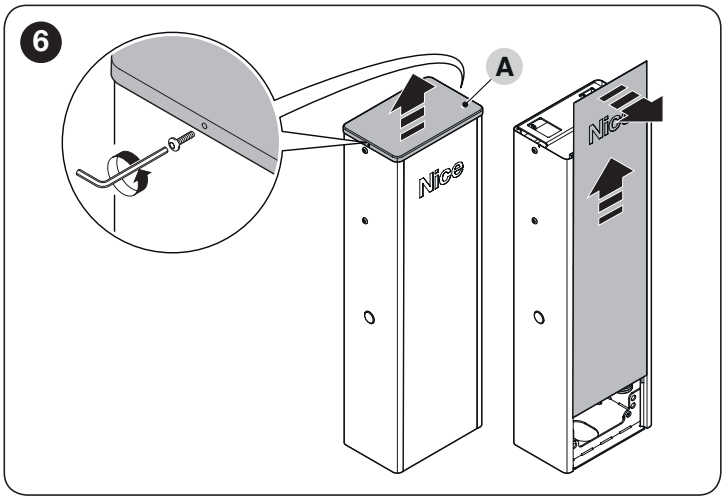

3. loosen the tension of the balancing spring on **WIDE M** and **WIDE L** by loosening the nut (**B**)

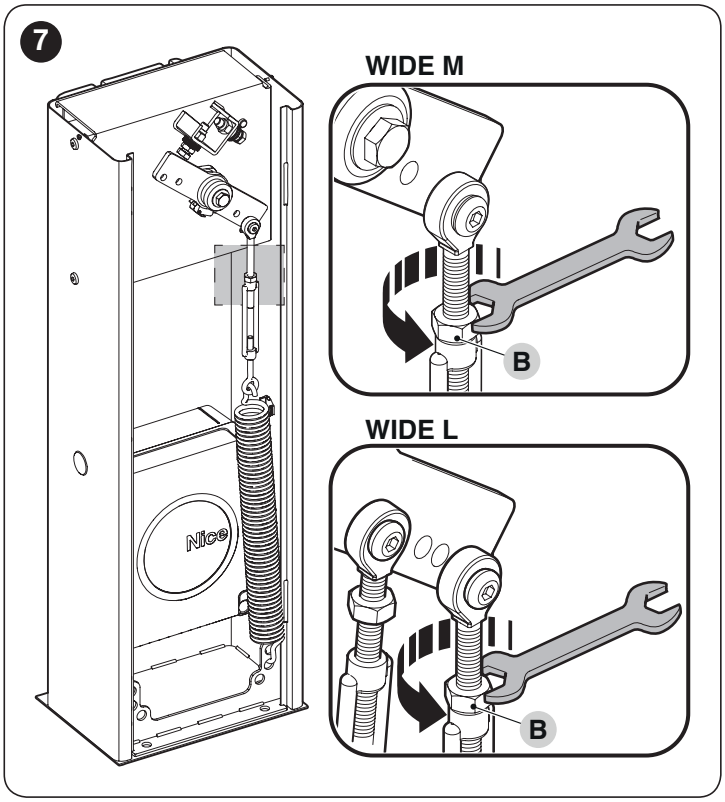

4. loosen the bolt (**C**) fastening the spring to the balancing lever

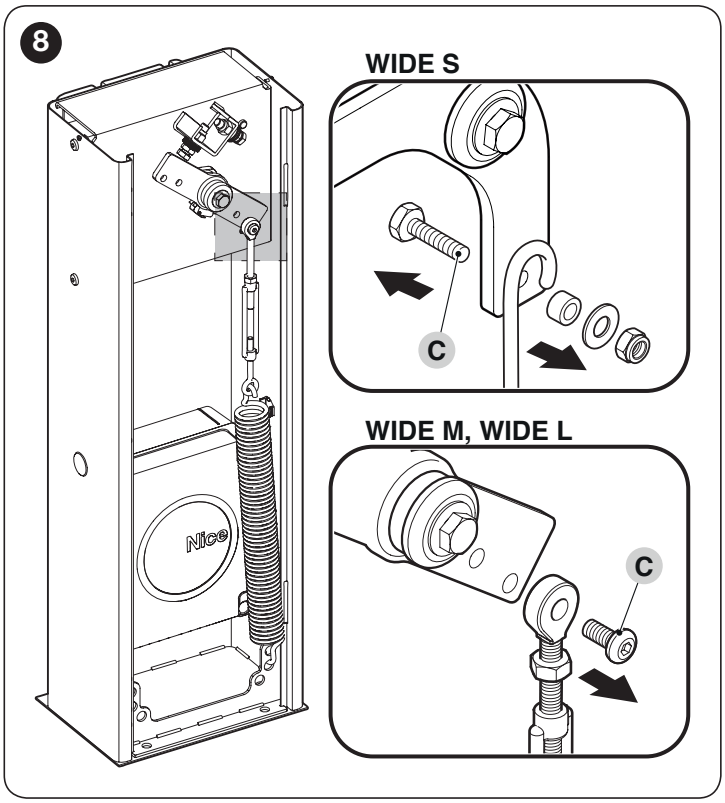

5. remove the balancing spring, by detaching it from the lower plate

6. if the closing direction is the desired one, the balancing spring should be positioned as shown in the diagram

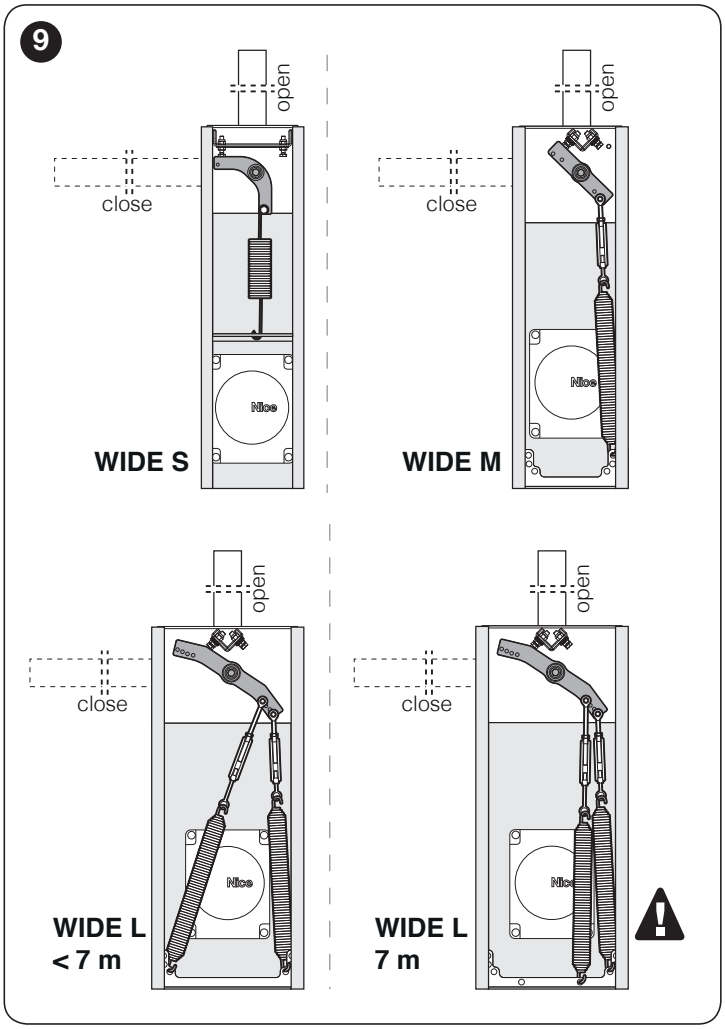

7. to set the closing manoeuvre of the boom towards the right of the barrier mechanism:
   - unlock the gearmotor (refer to the "***Manually unlocking and locking the gearmotor***" paragraph) and turn the balancing lever by 90°

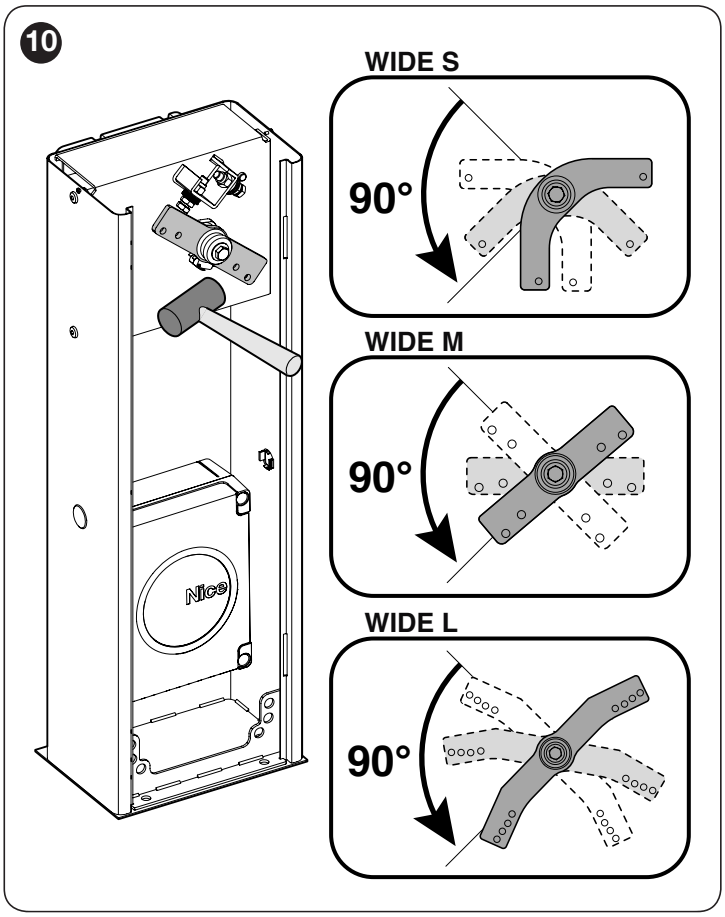

   - access the control unit by removing the protective cover
   - rotate through 180° the motor connector MOTOR (**D**) and the connector of the limit switches LIMIT SWITCH (**E**)

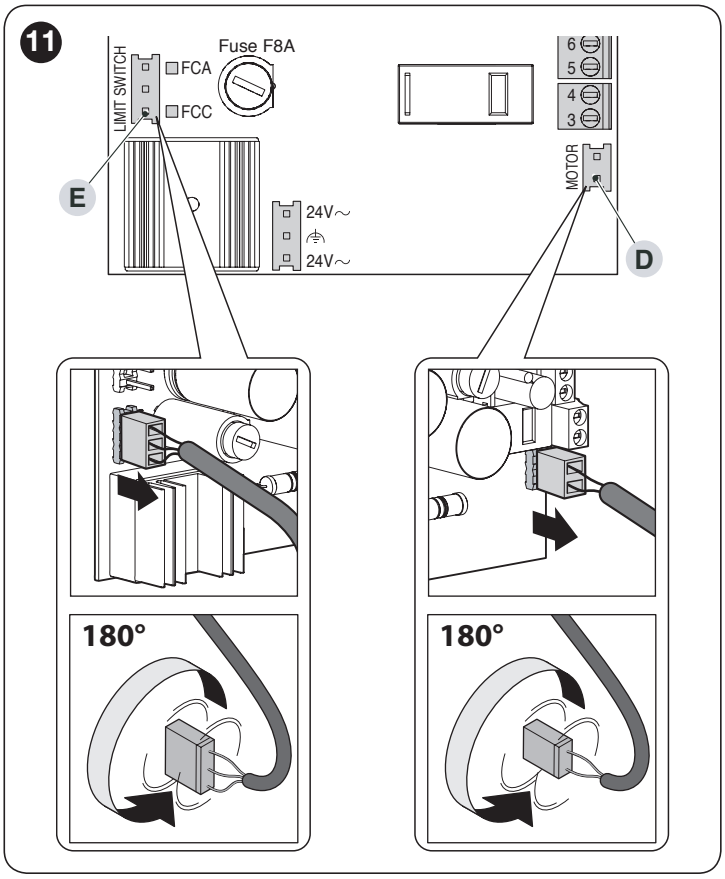

   - the balancing spring should be positioned as shown in the diagram

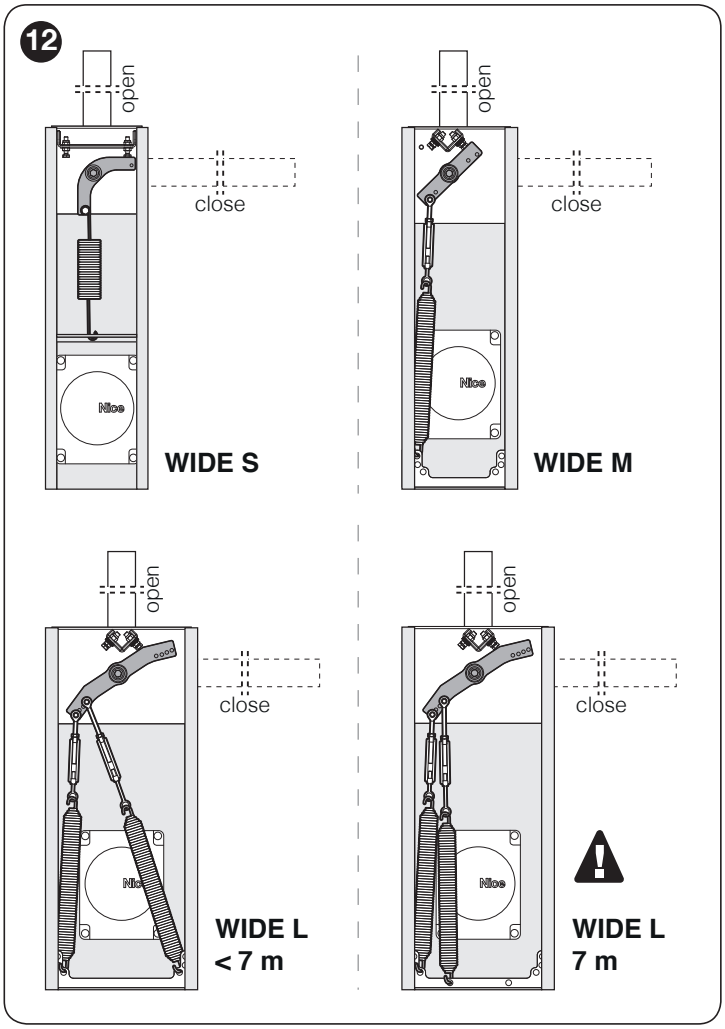

8. secure the spring to the lower plate
9. fasten the spring's eyelet to the balancing lever, tightening the bolt vigorously

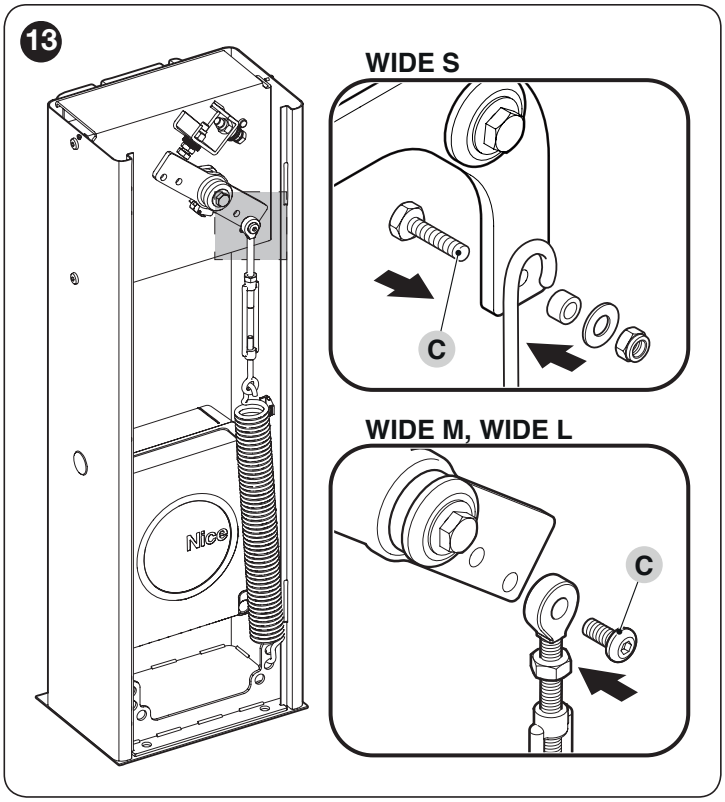

10. close the covers of the gearmotor
11. if the gearmotor was previously unlocked, lock it again.

3.7 INSTALLING THE GEARMOTOR

Incorrect installation may cause serious physical injury to the person working on the system or to its future users.

Before starting to assemble the automation, complete the preliminary checks described in the "*Pre-installation checks*" and "*Product usage limits*" paragraphs.

If there is a support surface:

1. remove the upper cover (**A**) of the boom gate cubicle
2. slide out the rear panel first towards the other and then outwards

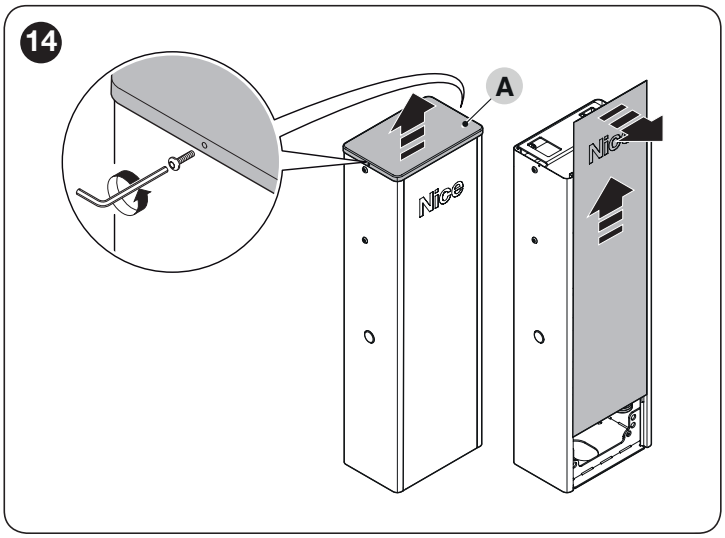

3. place the cubicle on the anchoring surface and mark the points corresponding to the slots

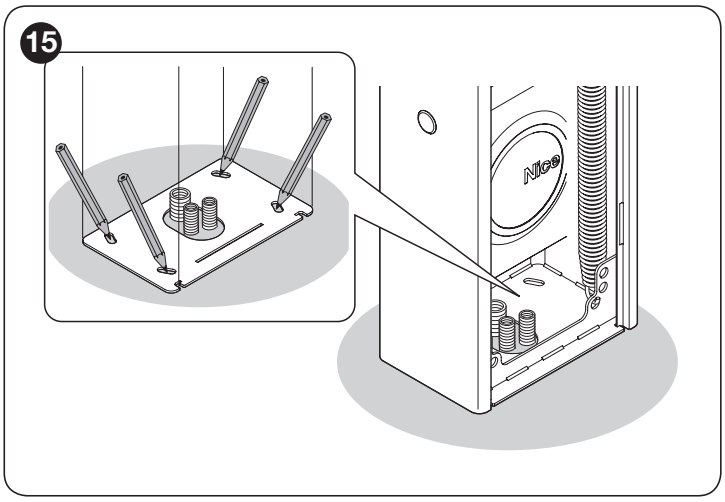

4. move the cubicle and drill the surface through the marked points
5. insert 4 expansion bolts (not supplied)
6. arrange the cubicle properly and secure it with the appropriate nuts and washers (not supplied).

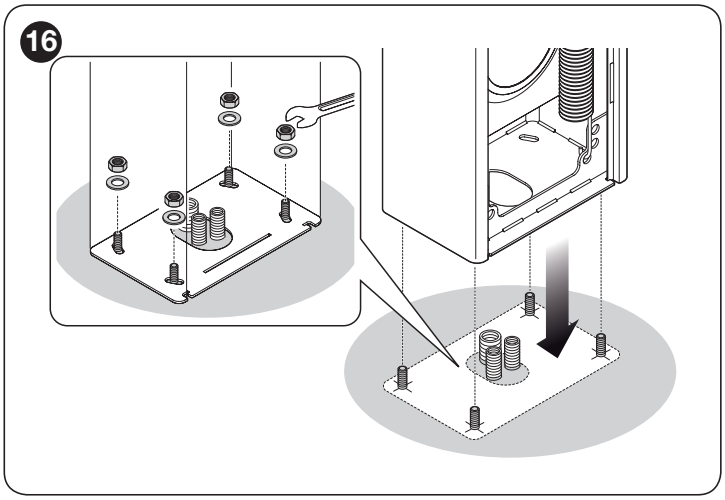

If there is no support surface:

1. dig the hole to insert the foundation plate

Note The anchoring surface must be completely flat and smooth. If the surface is made of concrete, the latter must be at least 0,15 m thick and must be suitably reinforced with iron cages. The concrete must have a volume above 0.2 m^3 (a 0.25 m thickness corresponds to 0.8 m^2, that is, equal to a square base with sides each measuring roughly 0.9 m). The plate can be anchored to the concrete using the 4 expansion bolts, equipped with 12 MA screws capable of withstanding a tensile load of at least 400 kg. If the anchoring surface is made of a different material, it is necessary to verify its consistency and whether the four anchoring points can withstand a load of at least 1,000 kg. Use the 12 MA screws to fasten the plate.

2. arrange the pipes for routing the electrical cables
3. fasten the four anchor bolts (**A**) to the foundation plate, inserting a nut and washer (supplied) on each, on the upper and lower sides of the plate

The lower nut must be screwed up to the end of the thread.

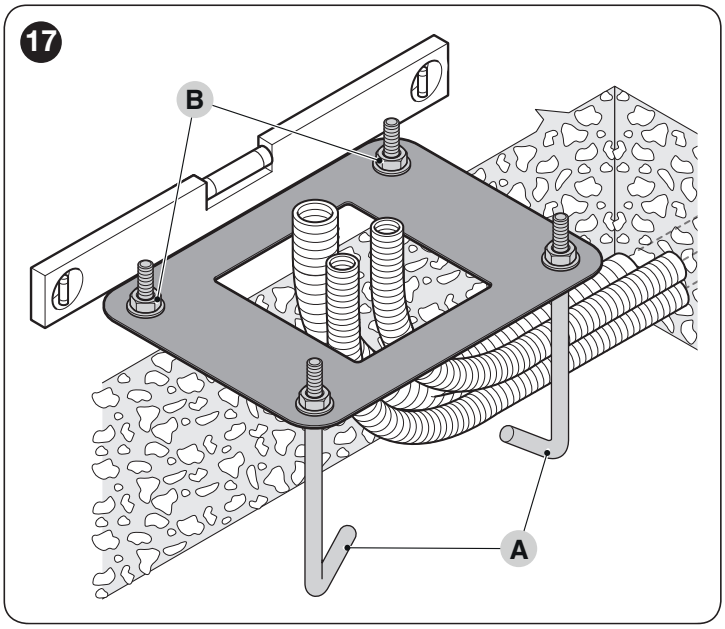

4. pour the concrete and, before it starts to set, place the foundation plate flush with the surface, parallel to the boom and perfectly level
5. wait for the concrete to set completely, which generally takes two weeks
6. remove the four upper nuts and washers from the anchor bolts
7. open the cubicle panel ("***Figure 6***")
8. arrange the cubicle properly and secure it with the appropriate nuts and washers removed previously ("***Figure 16***").

3.8 INSTALLING THE BOOM

Proceed as follows to mount the boom of the gate:

1. insert the two pins (**A**) through the appropriate housings on the exit motor shaft

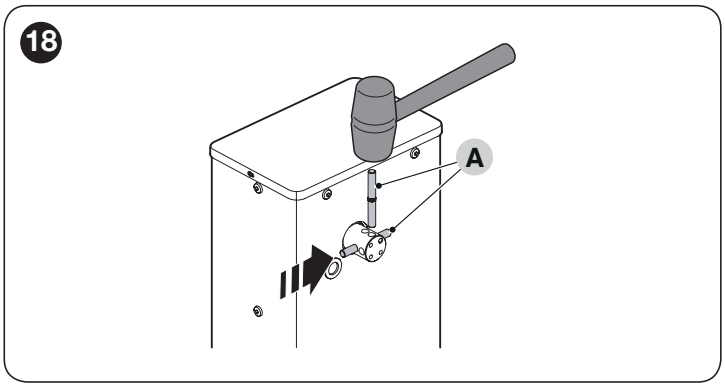

2. place the support (**B**) on the exit motor shaft, orienting it in the "vertical boom" position
3. fasten it with the appropriate screws and open Grower washers; tighten vigorously

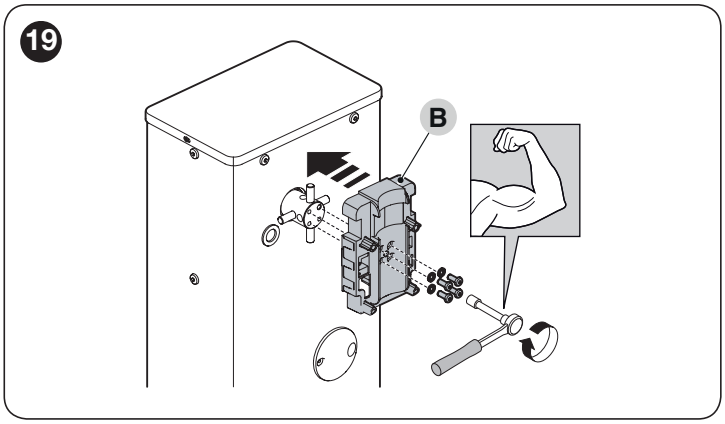

With booms consisting of two pieces, the shorter piece must be fastened to the cubicle.

4. position the cover (**C**) of the support and fasten it with the screws provided; leave the screws loose

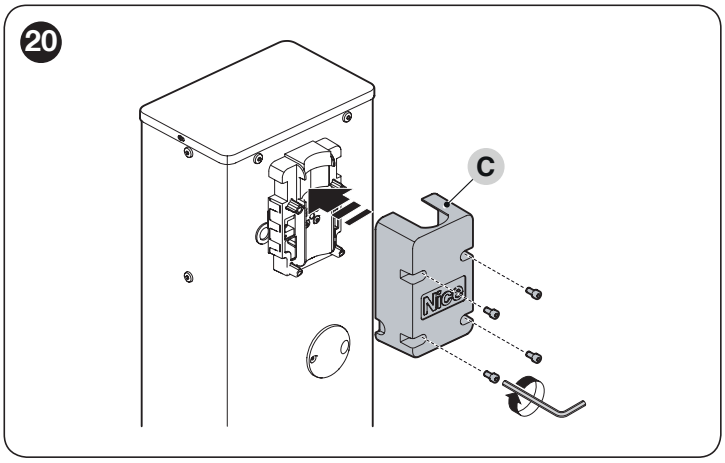

5. **only for WIDE L:** insert the aluminium connector (**D**) into one end of the shortest boom and lock it with the screw provided

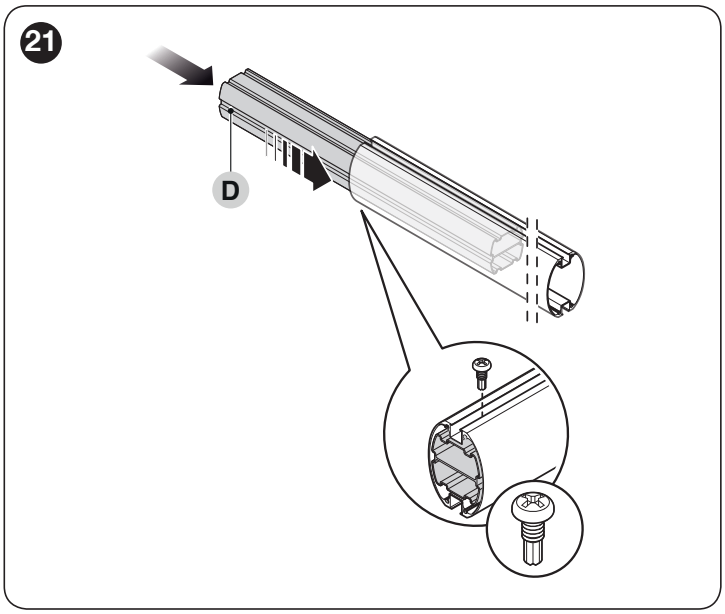

6. **only for booms made up of two pieces:** connect the universal joint (**E**) into the free ends of the two booms, aligning the holes correctly; loosen the three screws of the joint equally so that the latter can be fastened inside the booms

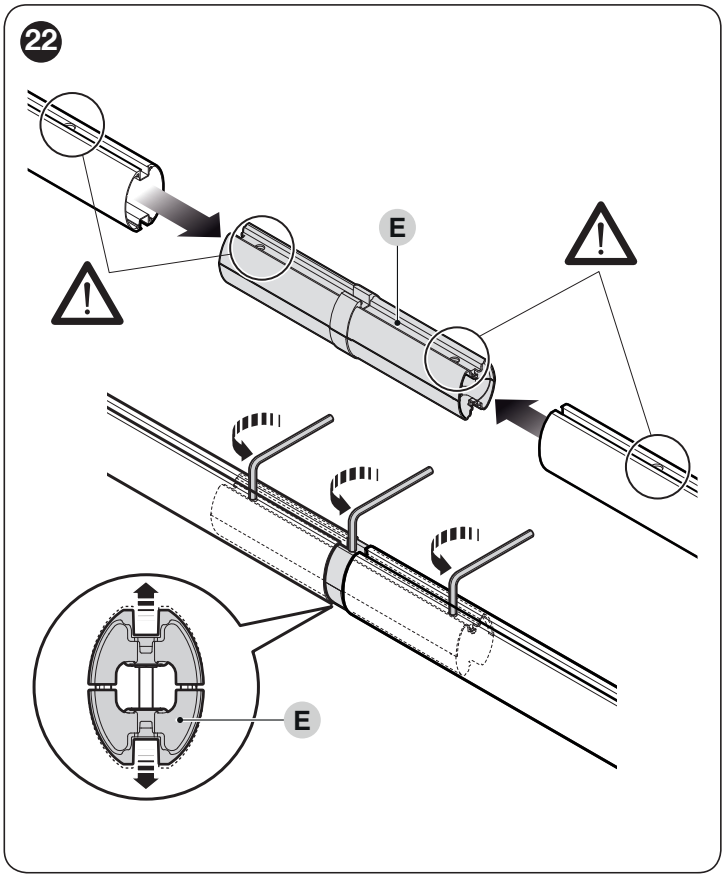

7. lightly oil the aluminium rail on both sides
8. along the entire length of the boom, insert the rubber impact protectors through the slots (**F**) alternating them with the relevant joints (**G**); the rubber protector can protrude roughly 1 cm from the end of the boom

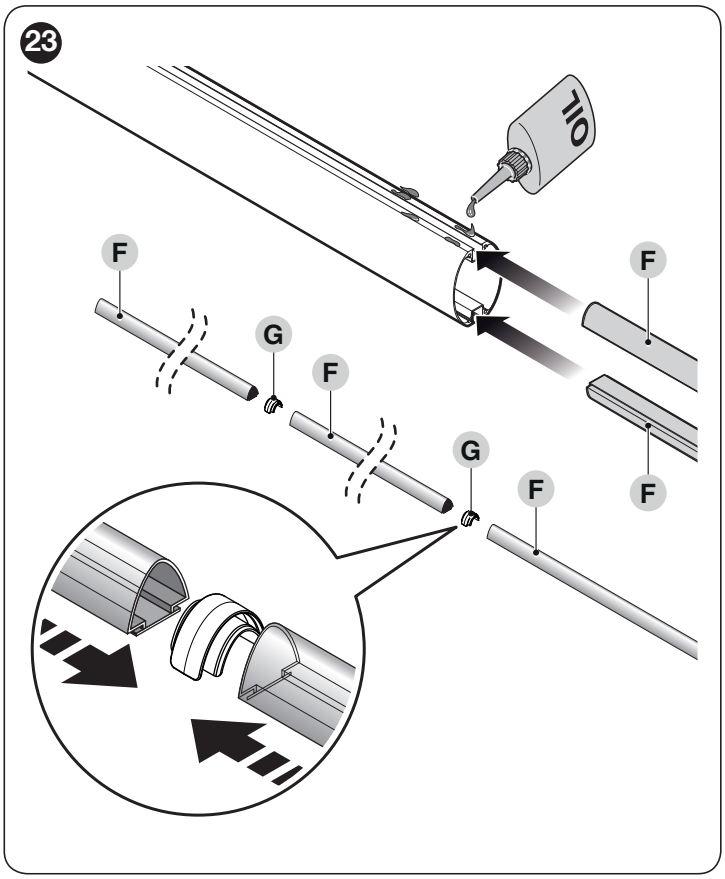

9. put on the boom cap (**H**) and secure it with the two screws
10. position and fit together the two rubber protector caps (**I**)

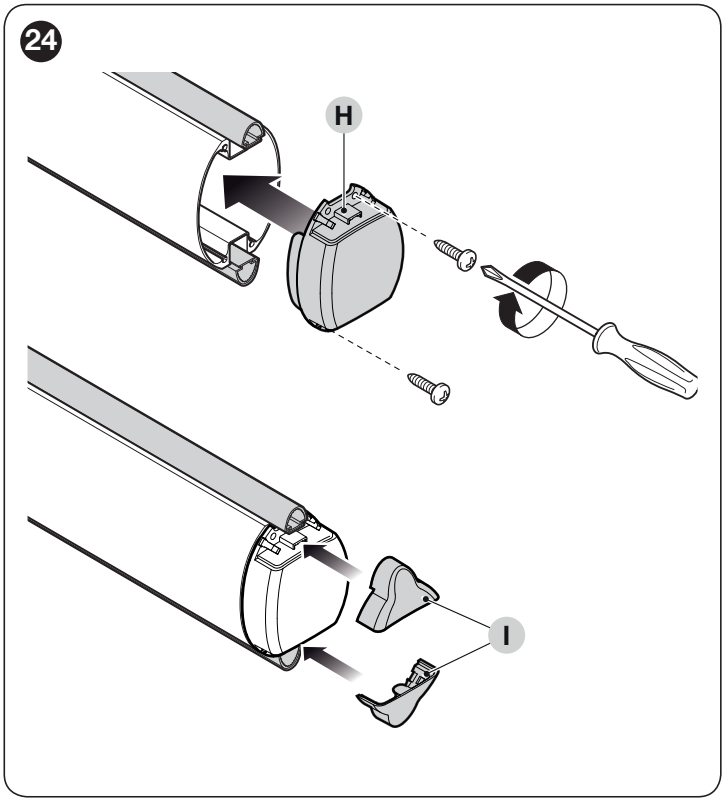

11. insert the complete boom into the shell (**J**) of the support all the way to the end
12. vigorously tighten the 4 screws of the support inserted previously.

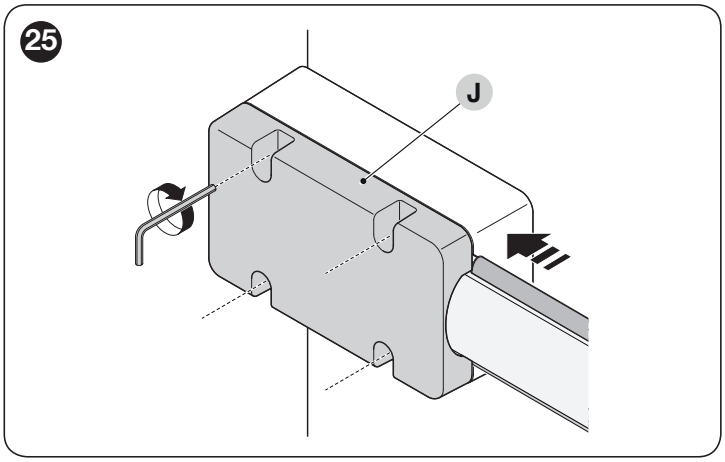

After installing the boom and the rubber impact protector, before proceeding further, the other accessories – if relevant – must be installed on the boom. To install them, refer to the respective instruction manuals.

3.9 ADJUSTING THE MECHANICAL LIMIT SWITCHES

To adjust the limit switches, proceed as follows:
1. unlock the gearmotor with the relevant key provided (refer to the "***Manually unlocking and locking the gearmotor***" paragraph)
2. manually move the boom so that it completes a full opening and closing manoeuvre
3. turn the screws of the mechanical stops (**A - B**) to adjust the boom's horizontal position, when it is closed, and its vertical position, when it is open

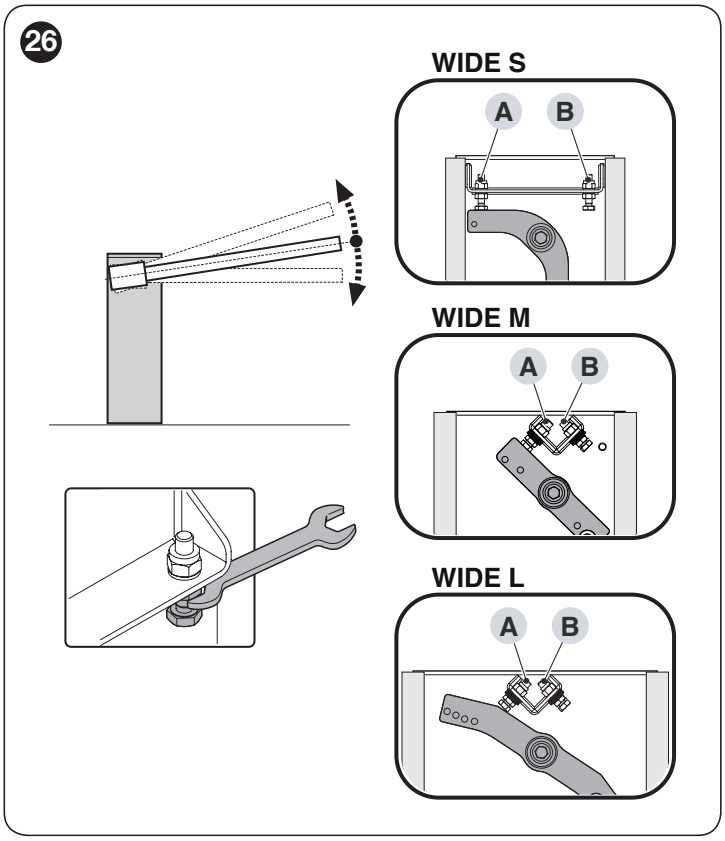

4. after making the adjustments, tighten the nuts vigorously.

3.10 BOOM BALANCING

The boom balancing operation is used to find the best balance between the overall weight of the boom, inclusive of the installed accessories, and the force opposed by the tension of the balancing spring.
To verify the spring tension, proceed as explained below.

For models WIDE S ("*Figure 27*")

1. unlock the gearmotor with the relevant key provided (refer to the "***Manually unlocking and locking the gearmotor***" paragraph)
2. manually move the boom to about half-way (45°) and leave it stationary
3. if the boom tends to rise, reduce the tension of the spring by moving the lower part towards the opening direction. On the other hand, if the boom tends to fall, increase the tension by moving the base of the spring away from the opening direction.

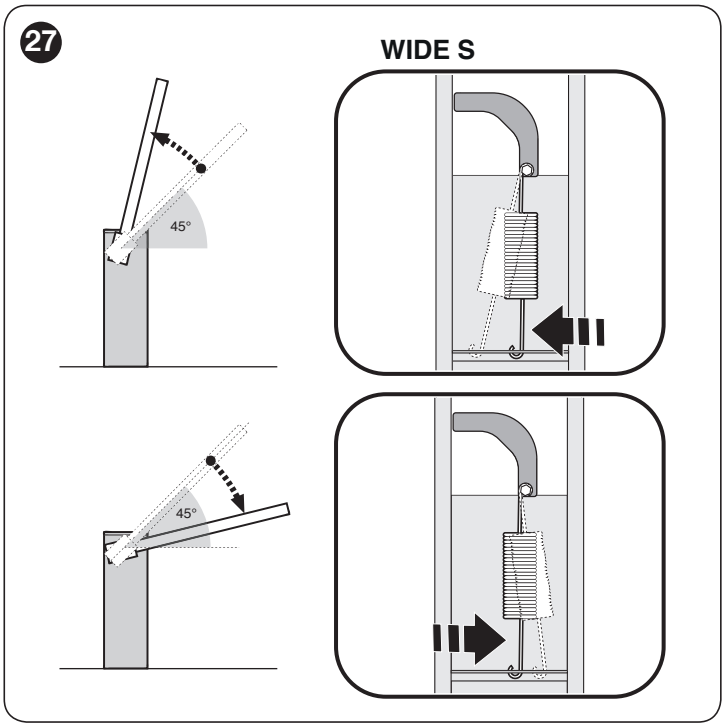

4. repeat the operation by positioning the boom also at roughly 20° and 70°. If the boom remains stationary in its position, it means that it is correctly balanced; a slight imbalance is allowed, but the boom must never move substantially
5. lock the gearmotor.

For models WIDE M, WIDE L ("*Figure 28*")

1. unlock the gearmotor with the relevant key provided (refer to the "***Manually unlocking and locking the gearmotor***" paragraph)
2. manually move the boom to about half-way (45°) and leave it stationary
3. if the boom does not stay in position, loosen nut (**A**) on the spring
4. if the boom tends to rise, reduce the tension of the spring by turning the stretcher (**B**) anti-clockwise. On the other hand, if the boom tends to fall, increase the spring tension by turning the stretcher (**B**) clockwise.

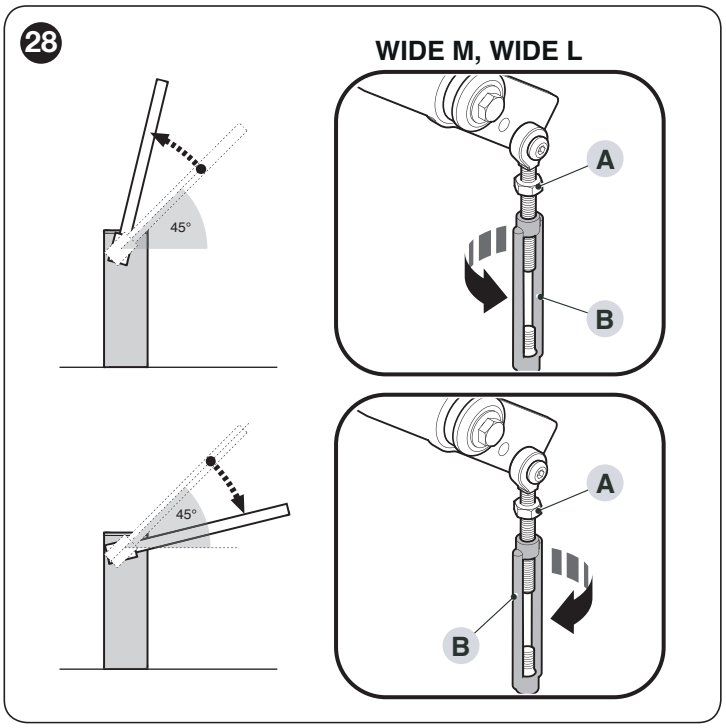

5. repeat the operation by positioning the boom also at roughly 20° and 70°. If the boom remains stationary in its position, it means that it is correctly balanced; a slight imbalance is allowed, but the boom must never move substantially
6. tighten nut (**A**) for the spring
7. lock the gearmotor.

3.11 MANUALLY UNLOCKING AND LOCKING THE GEARMOTOR

The gearmotor is equipped with a mechanical unlocking system that allows for opening and closing the boom manually.
These manual operations should only be performed in case of a power outage, malfunctions or during the installation phases.

To unlock the device:
1. turn the key slot cover
2. insert the key (**A**) and turn it towards the left or right

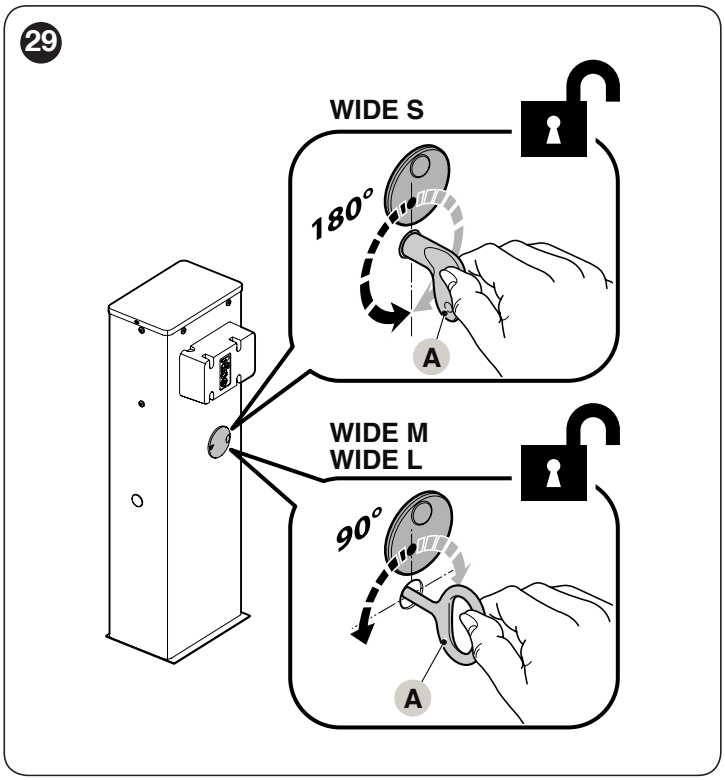

3. the gate leaf can now be moved manually to the desired position.

To lock the device:
1. turn the key (**A**) back to its initial position
2. remove the key
3. turn the key slot cover.

4 ELECTRICAL CONNECTIONS

4.1 PRELIMINARY CHECKS

All electrical connections must be made with the system disconnected from the mains electricity and with the back-up battery (if present) disconnected.

The connection operations must only be carried out by qualified personnel.

To make the electrical connections:
1. unhook the control unit box from its position
2. open the box

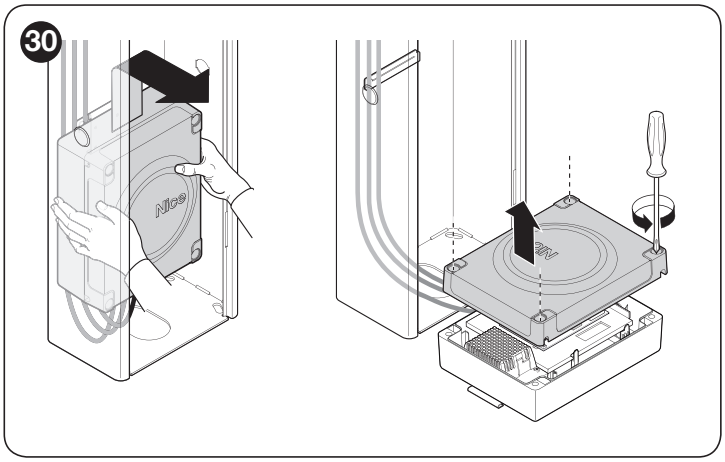

3. drill through the sections prepared for passing the cables
4. feed the electrical cables inside the barrier mechanism, starting from the base and moving towards the control unit
5. feed the power supply cable through the cable clamp and connect it to the 3-contact terminal with fuse
6. tighten the screw of the cable clamp

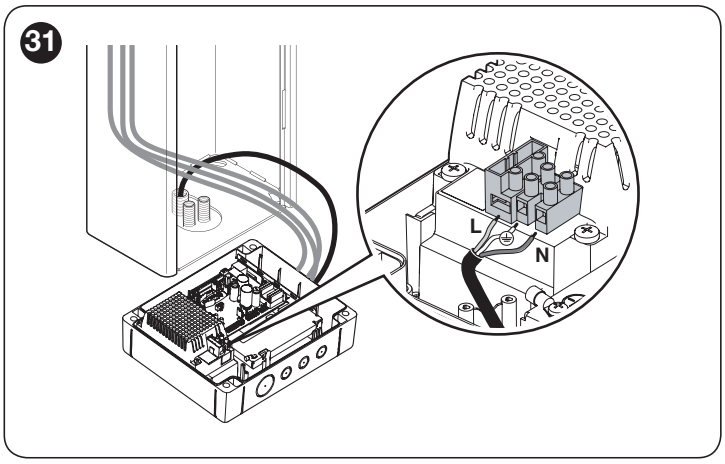

7. connect the remaining cables, by consulting the wiring diagram in "***Figure 32*** and ***33***". For greater convenience, the terminals are removable.

Before closing the cover, program the system (refer to paragraph "*PROGRAMMING*").

4.2 WIRING DIAGRAM AND DESCRIPTION OF CONNECTIONS

4.2.1 Wiring diagram

32

A **Standard connection.**

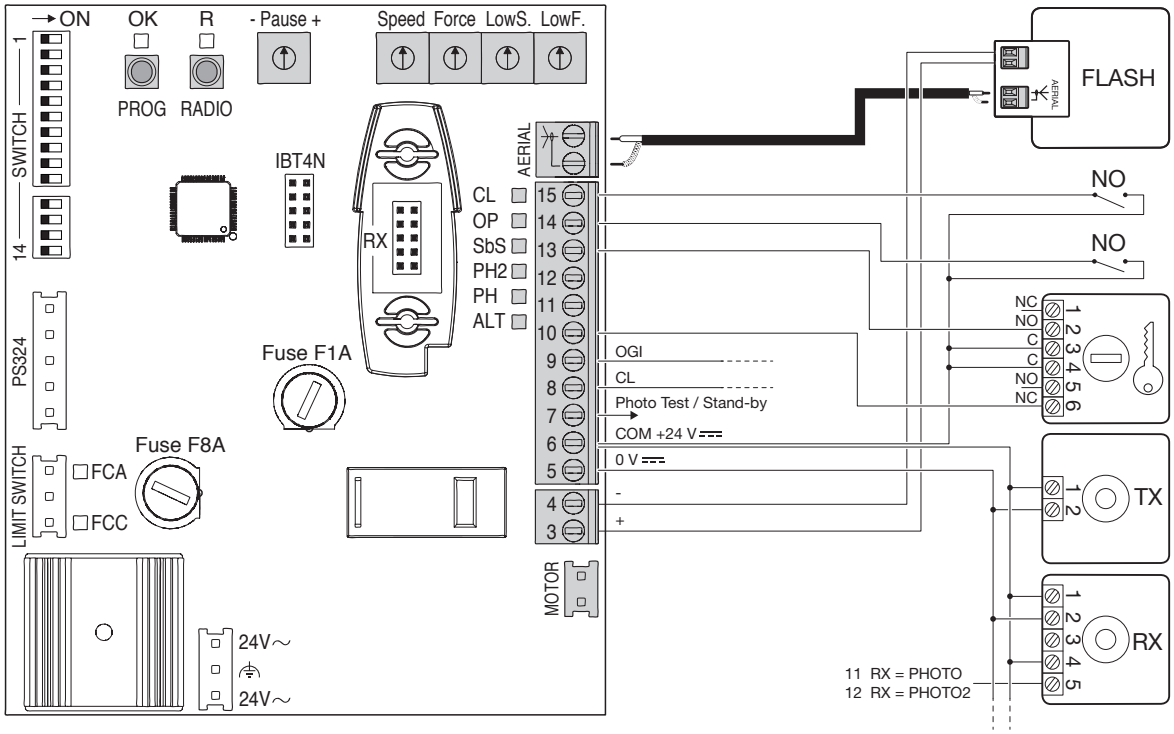

B **Connection with "Stand-by". Program switch 12 ON and stand-by function activated from Oview.**

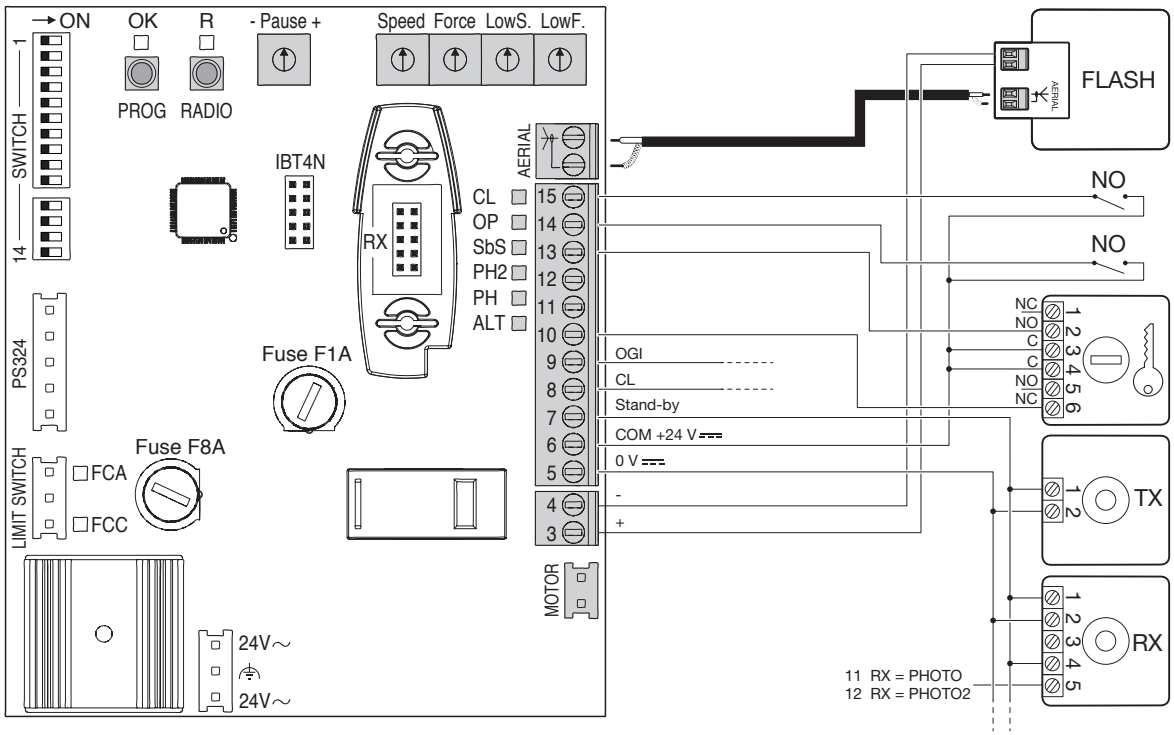

33

C **Connection with “Photo Test”. Program switch 12 ON.**

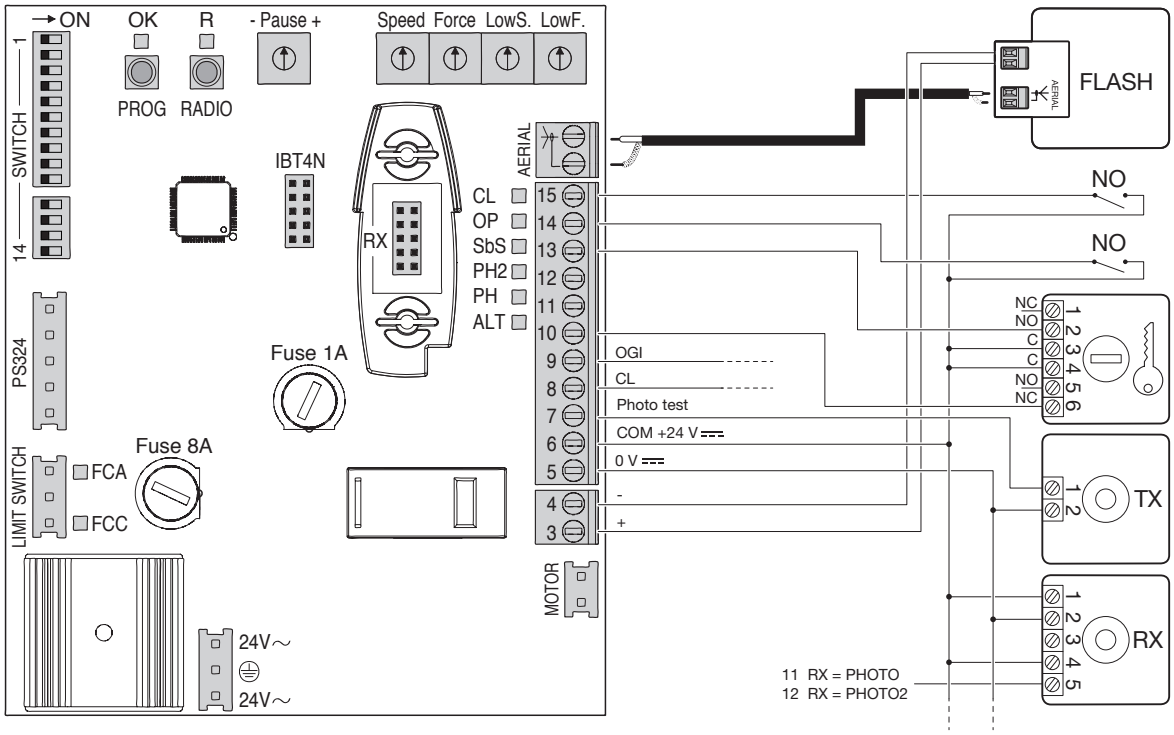

4.2.2 Description of connections

Table 4

ELECTRICAL CONNECTIONS		
Terminals	**Function**	**Description**
3-4	Warning light	Output for flashing light connection; when a manoeuvre is in progress, the flashing cycle is 0.5 s ON and 0.5 s OFF
5	Services	24 V DC output (-30% + 50%) to power the services, maximum 200 mA
6-8	CL	**Courtesy Light**: it comes on at the start of the operation and goes off 60 seconds after it finishes
6-9	OGI	**Open Gate Indicator**: it is OFF when the boom is closed and ON when a manoeuvre is stopped with the boom in any position; it flashes slowly during opening and quickly during closing
6-10	Stop	Normally closed (NC) input for devices which control blocking actions or the immediate stoppage of the manoeuvre in progress
6-11	Photo	Normally closed (NC) input for safety devices that cause reverse movement or stoppage if they intervene during a closing manoeuvre
6-12	Photo 2	Normally closed (NC) input for safety devices that cause reverse movement or stoppage if they intervene during an opening manoeuvre
6-13	Step-by-Step	**Step by Step**: Normally open (NO) input for control devices whose intervention results in opening or closing manoeuvres with the sequence Open - Stop - Close - Stop
6-14	Open	Normally open (NO) input for control devices whose intervention results in an opening manoeuvre with the sequence Open - Stop - Open - Stop
6-15	Close	Normally open (NO) input for control devices whose intervention results in a closing manoeuvre with the sequence Close - Stop - Close - Stop
7	24V / Photo test / Stand-by	24 V DC output (–30% + 50%) to power the services, maximum 200 mA / Photo test / Stand-by
AERIAL	Antenna	Radio receiver aerial input The aerial can be incorporated into the flashing light or mounted externally

If the NC (Normally Closed) contact inputs are not used, they must be jumpered to terminal 6 or 7.

NO (Normally Open) contact inputs must be left empty, if they are not used.

The contacts of devices connected to the control unit must be mechanical and free from any electric potential; no connections are allowed to devices whose contacts are defined as "open collector", "PNP" or "NPN".

Note 1 To make the standard connection effective, set switch 12 to OFF.

Note 2 To activate the Photo test, set switch 12 to ON. The configuration, made using Oview, should be set to “Photo test” (factory setting).

Note 3 To activate the Stand-by mode, set switch 12 to ON. The configuration, made using Oview, should be set to “Stand-by”.

5 FINAL CHECKS AND START-UP

5.1 POWER SUPPLY CONNECTION

The power supply connections must only be made by qualified and experienced personnel possessing the necessary requirements and in full conformity to the laws, regulations and standards in force.

Connect the control unit to a power line equipped with a safety earthing system. Install a circuit breaker with a contact gap that ensures full disconnection in the Category III overvoltage conditions, or mount a plug and socket system.

As soon as the product is powered, a few simple checks should be carried out:

1. check that the OK LED starts flashing at regular intervals of about 1 flash per second
2. check that the LEDs relative to the NC contact inputs are ON (all safety devices active) and the LEDs relative to the NO contact inputs are OFF (no control present).

If the above conditions are not satisfied, immediately switch off the power supply to the control unit and carefully check the electrical connections.
Further useful information on searching and diagnosing faults is included in the “***Troubleshooting***” paragraph.

5.2 ADJUSTMENT OF THE MECHANICAL STOP POSITIONS

The mechanical stop positions must be adjusted (maximum opening and maximum closing).
Check the correspondence between the direction of the manoeuvre and the FCC and FCA limit-switch LEDs:

1. unlock the gearmotor with the relevant key provided (refer to the "***Manually unlocking and locking the gearmotor***" paragraph)
2. manually move the boom to the maximum closing position and check that the FCC LED is OFF and the FCA LED is ON
3. move the boom to the maximum opening position and check that the FCA LED is OFF and the FCC LED is ON
4. move the boom to 45° and manually lock the barrier mechanism

If this does not happen, you need to:

5. power the automation off
6. rotate through 180° the limit switch connector on the control unit (LIMIT SWITCH)
7. power the automation up.

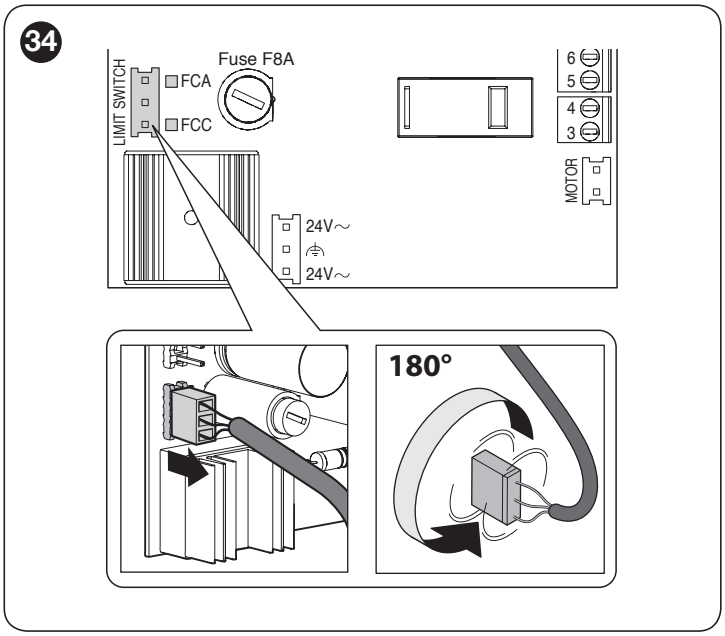

In order to exploit the slowing-down function most effectively, it is necessary that the limit switch (**A**) triggers at about 20° before the mechanical stopping point is reached; if necessary, adjust the cams (**B**) to set the desired point.

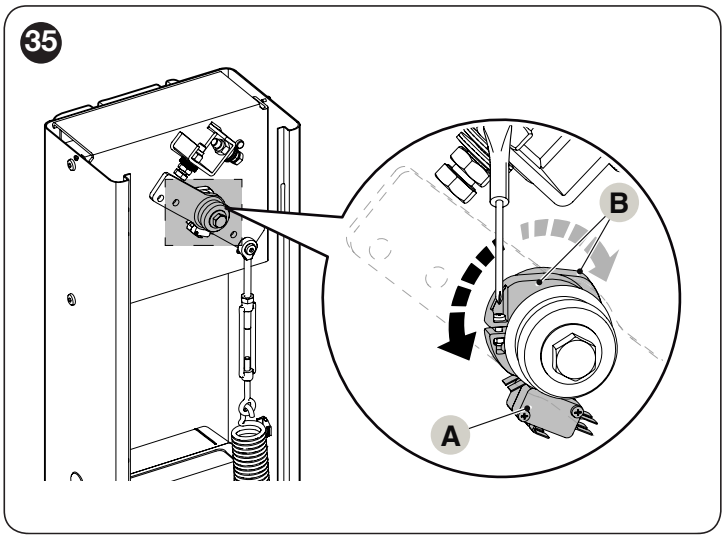

5.3 CHECKING THE BOOM'S MOVEMENT

Once the limit switch adjustment stage is complete, it is advisable to carry out a few manoeuvres in order to verify that the barrier mechanism moves properly.
To do this:

1. set all switches to OFF to have hold-to-run operation
2. with the boom at 45°, give a short control pulse to one of the devices connected to the Open input (OP - "***Figure 32*** and ***33***") and **check that the movement of the boom is in the opening position**

If this does not happen, you need to:

3. power the automation off
4. rotate through 180° the motor connector (MOTOR) on the control unit
5. power the automation up
6. open and close the door several times to make sure that there are no defects in the assembly, adjustments or other faults.

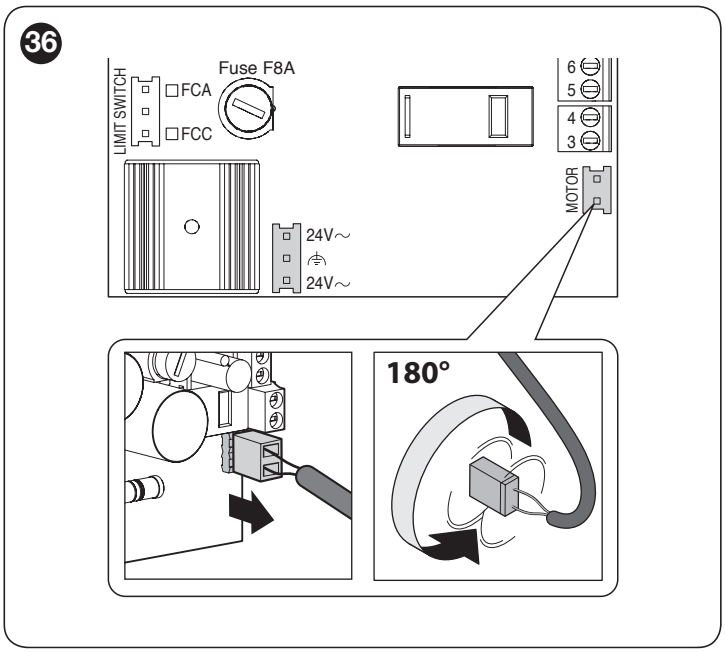

6 TESTING AND COMMISSIONING

These are the most important phases of the automation's construction, as they ensure maximum safety of the system. The test can also be used to periodically verify the devices making up the automation.

Testing and commissioning of the automation must be performed by skilled and qualified personnel, who are responsible for the tests required to verify the solutions adopted according to the risks present, and for ensuring that all legal provisions, standards and regulations are met, in particular all the requirements of the EN 12445 standard, which defines the test methods for checking gate automations.

The additional devices must undergo specific testing, both in terms of their functions and their proper interaction with the control unit. Refer to the instruction manuals of the individual devices.

6.1 TESTING

To run the test:

1. verify that all the instructions stated in the "***GENERAL SAFETY WARNINGS AND PRECAUTIONS***" chapter have been strictly observed

2. check that the boom is correctly balanced (see paragraph "***Boom balancing***")

3. check that the manual unlocking device works properly (see paragraph "***Manually unlocking and locking the gearmotor***")

4. using the control devices (transmitter, control push-button, key selector, etc.), test the boom opening, closing and stopping phases, ensuring that the movement matches the specifications. Several tests should be conducted to assess the boom's movement and to check for any assembly or adjustment defects or any particular points of friction

5. verify the correct operation of all the safety devices present, one-by-one (photocells, sensitive edges, etc.) whenever a device intervenes, the "OK" LED on the control unit will emit 2 quicker flashes to confirm the recognition

6. verify the correct operation of the photocells in the following way:

- depending on whether one or two pairs of photocells have been installed, one or two blocks of rigid material (e.g. wooden panels) are required, measuring 70x30x20 cm. Each block must have three sides of reflective material (e.g. mirror or glossy white paint), one for each dimension, and three sides of opaque material (e.g. matt black paint). To test the photocells positioned 50 cm above the ground, the block must be placed on the ground, or raised to 50 cm when testing photocells positioned 1 m above the ground
- if the test is on **a pair of photocells**, the testing block must be placed directly under the centre of the boom with the 20 cm sides facing the photocells and moved along the entire length of the boom

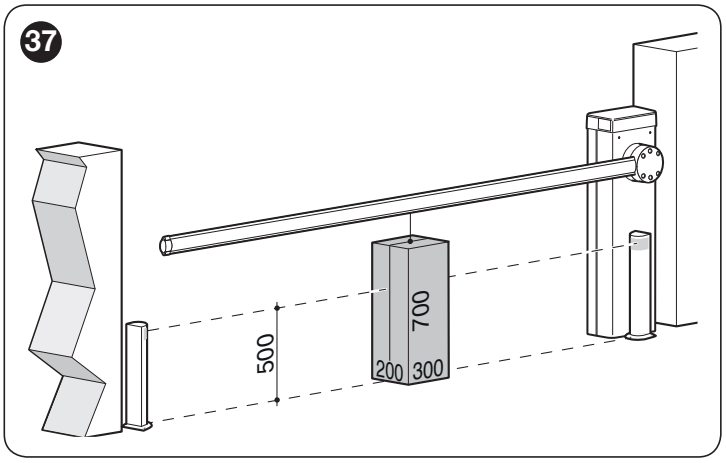

- if the test is on **two pairs of photocells**, the test must first be performed individually for each pair of photocells using one testing block and then repeated using two testing blocks; each testing block must be positioned laterally in relation to the centre of the boom, at a distance of 15 cm and then moved along the entire length of the boom

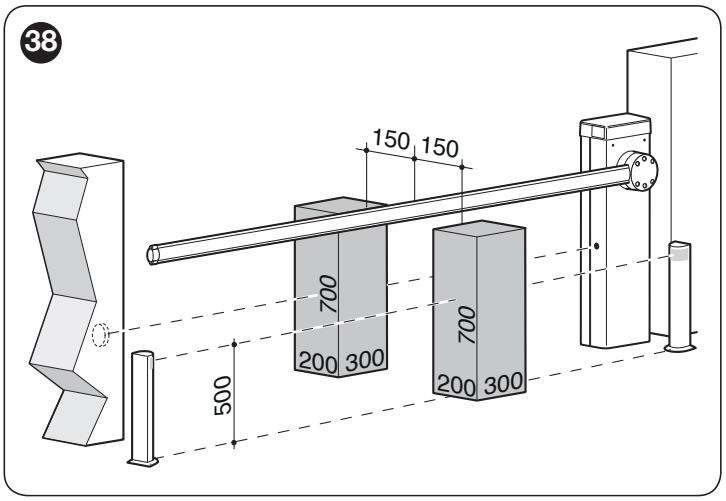

- during these tests, the testing block must be detected by the photocells in any position it lies along the entire length of the boom

7. check that there are no interferences between the photocells and other devices:

- block the line of sight between the pair of photocells with a cylinder (diameter 5 cm, length 30 cm), by moving it close to the TX photocell first then next to the RX photocell and then at the mid-point between the two

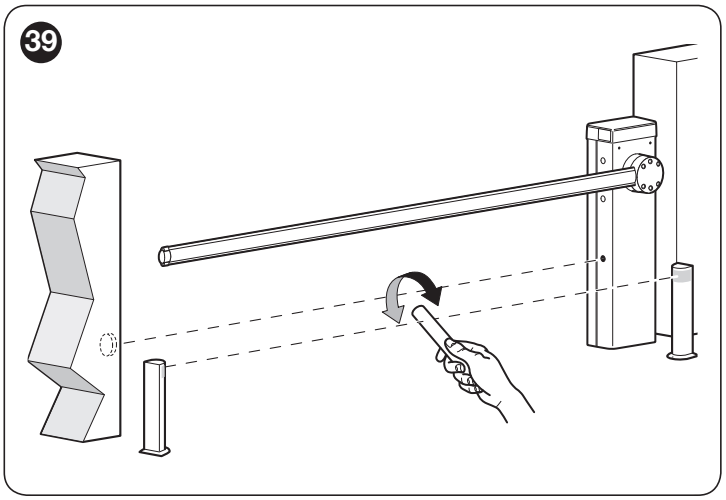

- check that the device intervenes in all cases, switching from the active to the alarm status and vice-versa
- check that it triggers the intended action in the control unit (e.g. a reversal of the movement during the closing manoeuvre)

8. **check on the safeguard against the lifting hazard**: in automations with vertical movement it is necessary to verify that there is no lifting hazard. This test can be carried out in the following way:
- hang a 20 kg load (e.g. a sand bag) midway along the boom's length
- send an opening command and check that during the manoeuvre the boom does not exceed a height of 50 cm above its closed position
- if the boom exceeds this height, the motor force must be reduced (refer to the chapter "***PROGRAMMING***")

9. if potentially dangerous situations due to the boom's movement have been prevented by limiting the impact force, the latter must be measured according to the EN 12445 standard and, if the "motor force" control is used to aid the system in reducing the impact force, it is necessary to test various adjustments to find the one that gives the best results

10. **checking the efficiency of the unlocking system**:
- put the boom in the closed position and manually unlock it (see paragraph "***Manually unlocking and locking the gearmotor***")
- verify that this occurs smoothly
- verify that the manual force to move the boom during the opening phase does not exceed 200 N (roughly 20 kg)
- the force is measured perpendicularly to the boom at 1 m from the rotation axis

11. **verification of the power supply disconnection system:** operate the power disconnection device and disconnect any available back-up batteries; check that all the LEDs on the control unit are OFF and that the boom remains stationary when a command is sent. Check the efficiency of the locking system to prevent any unintentional or unauthorised connection.

6.2 COMMISSIONING

Commissioning can only be performed after all testing phases have been successfully completed.

Before commissioning the automation, ensure that the owner is properly informed of all residual risks and hazards.

The gate cannot be commissioned partially or under "temporary" conditions.

To commission the automation:

1. compile the automation's technical file, which must include the following documents: overall drawing of the automation, wiring diagram, risk assessment and relative solutions adopted, the manufacturer's declaration of conformity for all devices used and the declaration of conformity compiled by the installer

2. affix a permanent label or sign on the cubicle specifying the operations for unlocking the gate and manoeuvring it manually "***Figure 40***"

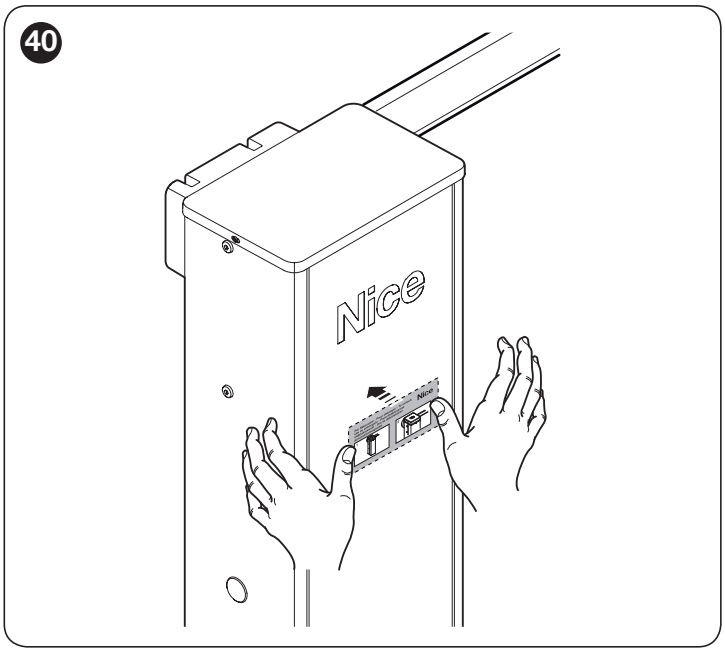

3. affix a data plate to the cubicle specifying at least the following data: type of automation, name and address of the manufacturer (responsible for commissioning), serial number, year of manufacture and CE mark

4. compile the declaration of conformity of the automation and hand it to the owner of the automation

5. compile the User Manual of the automation and hand it to the owner of the automation

6. compile and provide the owner with the automation's "Maintenance schedule", containing the maintenance instructions for all the automation's devices.

For all the above-mentioned documentation, Nice – through its technical assistance service – provides the following: pre-completed forms.

7 PROGRAMMING

The control unit can be programmed by adjusting the trimmers (**A-E**) and switches (**F**)
They are shown here below with their factory settings.

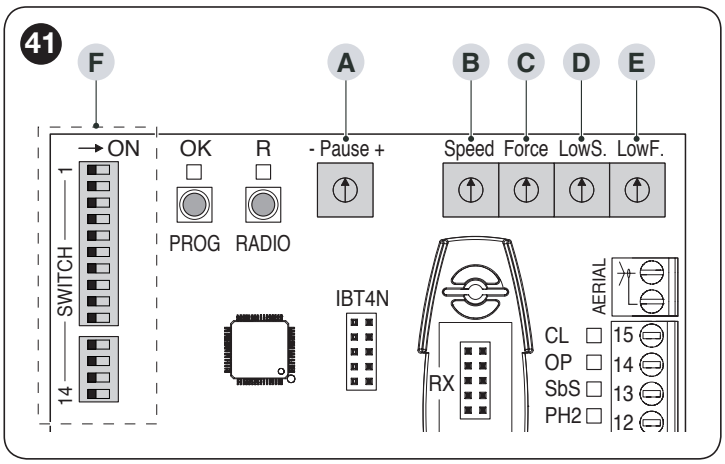

Refer to chapters "*Programming the control unit*" and "*Adjusting the trimmers*" for the complete list of parameters and the relative selectable values.

7.1 ADJUSTING THE TRIMMERS

The control unit has five trimmers (see "***Figure 41***"), which are described in the following table.

To make the trimmer adjustment effective, switches 13 and 14 should be set to "OFF" before the adjustment, and set back to "ON" once it is complete.

To assess the effect of the trimmer adjustments, it is advisable to have the barrier mechanism perform some opening and closing manoeuvres.

Do this operation manually (hold-to-run):

1. set switches 13 and 14 (**A**) to "OFF"
2. if you are doing this procedure for the first time, set all trimmers to the halfway point
3. by acting on the devices connected to the Step-by-step, Open and Close inputs, have the barrier mechanism perform some opening and closing manoeuvres: check that the boom movement begins with a phase of acceleration, followed by a constant speed, and that it starts the deceleration phase 20° before the mechanical stop
4. release the control button to immediately stop the manoeuvre: if the SbS (Step-by-Step) input is used as a control, the first movement after the stop will be an opening manoeuvre
5. adjust the trimmers so that the operation of the automated system is as you require
6. set switches 13 and 14 (**A**) back to "ON".

Table 5

ADJUSTING THE TRIMMERS

Trimmer		Description
A	Pause	Sets the time between the end of an opening manoeuvre and the start of the next closing manoeuvre. Only valid if the control unit is programmed in Automatic operating mode ("***Table 6***").
B	Speed	Adjusts the maximum speed of the boom from the start of movement to the slowing cam. It must be set so as not to create jerking movements during normal operation; the movement must be as even as possible.
C	Force	Adjusts the intervention threshold of the obstacle detector from the start of movement to the slowing cam. If an obstacle is encountered, the manoeuvre is completely reversed. A brief reversal takes place after the third consecutive intervention.
D	Low Speed	Adjusts the speed of the slowing cam up to the end of travel. It must be set so as not to create jerking movements during normal operation; the movement must be as even as possible.
E	Low Force	Adjusts the intervention threshold of the obstacle detector from the slowing cam up to the end of travel. In the event of an obstacle where no positions have been acquired or within the "non-reversal zone", the manoeuvre is immediately stopped. Where positions have been acquired or outside the "non-reversal zone", the manoeuvre is completely reversed. A brief reversal takes place after the third consecutive intervention.

7.2 ALT INPUT AND MECHANICAL STOP POSITIONS LEARNING

The following procedure carries out the learning of the device connected to the ALT input and the mechanical stop positions. At the end of this procedure, the control unit is able to detect obstacles even when the barrier mechanism is between the slowing cam and the mechanical limit switch.
The following information is saved during the procedure:
- Configuration of "ALT" input (NC, NO, 8k2, 4k1) with default NC.
- Opening and closing positions.
- Non-reversal zone calculation.
- Position display on Oview.

To start this procedure:
1. position the boom halfway
2. set switches 13 and 14 to OFF
3. hold down the PROG button for 3s; the control unit acquires the "ALT" input status and starts the position search procedure, which consists of:
   - full closing manoeuvre
   - full opening manoeuvre
   - full closing manoeuvre
4. repeat step 2 if the slowing cams are moved
5. the speed and obstacle detection trimmers can be adjusted by testing them using any movement control
6. when the programming is complete, set switches 13 and 14 to ON.

The control unit will save the settings if the installation has been successfully completed. The OK LED will again start flashing green once a second.

The control unit will only save the settings if the system switches from installation (switches 13 and 14 set to OFF) to normal operation (switches 13 and 14 set to ON). If only one of the switches is changed, the control unit will not save the settings.

One press of the PROG button during installation will stop the manoeuvre.

If the position search is not successfully completed, the positions will be deleted and the "ALT" input returns to the default configuration.

During the position search procedure, the inputs (ALT, SbS, PHOTO, etc.) operate normally.

When switches 13 and 14 are set to ON, the PROG button operates as a “SbS” (Step-by-Step) control.

If the trimmers or some of the switches are changed during normal operation, an orange LED will be flashing on the control unit once a second. Manoeuvres can continue and the previously saved trimmer value will be used.

7.3 PROGRAMMING THE CONTROL UNIT

The following table describes the operation of the control unit switches (see also “***Figure 41***”).

Table 6

PROGRAMMING PARAMETERS		
Switches 1-2	**Function**	**Description**
OFF-OFF	Manual (hold-to-run)	the manoeuvre is only performed while the control is active (transmitter button is pressed hold-to-run).
ON-OFF	Semi-automatic	Submitting a control causes the complete opening or closing manoeuvre to be performed. **[Note 1-3-4]**
OFF-ON	Automatic (automatic closing)	Submitting a control causes an opening manoeuvre to be performed, then the system pauses and then a closing manoeuvre is performed automatically. **[Note 2-3-4]**
ON-ON	Automatic + Always Closes	If, when the power returns after a power failure, the control unit detects that the boom is in an opening position, it automatically starts a closing manoeuvre preceded by 5 seconds of pre-flashing. **[Note 3-4]**
Switch 3	**Function**	**Description**
ON	Condominium (not available in manual mode)	When a "Step-by-Step" control is submitted and the barrier starts to open, it cannot be stopped by any other “Step-by-Step” or Open control submitted by radio until the manoeuvre is complete. When closing, on the other hand, submitting a new “Step-by-Step” control will stop and reverse the manoeuvre.
OFF		Deactivated
Switch 4	**Function**	**Description**
ON	Step-by-step cycle	OPEN - CLOSE - OPEN - CLOSE
OFF		OPEN - STOP - CLOSE - STOP
Switch 5	**Function**	**Description**
ON	Pre-flashing	When a control is submitted, the flashing light starts flashing and, after 5 seconds (2 seconds in Manual mode), the manoeuvre starts.
OFF		Deactivated
Switch 6	**Function**	**Description**
ON	Flashing also in pause	The flashing light remains active throughout the manoeuvre and also during the pause to indicate that a closing manoeuvre is about to occur.
OFF		The flashing light remains active only during the manoeuvre (opening or closing).

PROGRAMMING PARAMETERS		
Switch 7	**Function**	**Description**
ON	Close immediately after Photo (only if set on Automatic operating mode)	When set in Automatic mode, it holds the boom open only for the time required for vehicles or pedestrians to pass through it; in fact, when the Photo safety devices have been cleared, the manoeuvre stops and after 5 seconds a closing manoeuvre starts automatically, regardless of the Pause time settings.
OFF		Deactivated
Switch 8	**Function**	**Description**
ON	Safety Photo also in opening	The intervention of the safety device also causes an interruption to the manoeuvre during opening. When set in Semi-automatic or Automatic modes, the opening manoeuvre starts again as soon as the safety devices have been cleared.
OFF		The intervention of the safety device causes an interruption to the closing manoeuvre.
Switches 9-10	**Function**	**Description**
OFF-OFF	OGI and CL	The OGI output (terminal 9) assumes the function of **Open Gate Indicator:** off when closed, flashes fast when closing, flashes slowly when opening, constantly on when open. The CL output (terminal 8) assumes the function of **Courtesy Light:** it remains constantly on for the entire duration of the manoeuvre and for 1 minute subsequently.
ON-OFF	One-way traffic light and CL	The OGI output (terminal 9) assumes the function of a one-way traffic light: in this mode a green light can be applied to the output, which indicates that the way is clear when it is on. **Light off**: indicates that the boom is closed or closing. **Light on**: indicates that the boom is open or opening. The CL output (terminal 8) assumes the function of **Courtesy Light:** it remains constantly on for the entire duration of the manoeuvre and for 1 minute subsequently.
OFF-ON	Alternate traffic light	Function for controlling the flow of vehicles in the two directions using controlled transit of the barrier mechanism. A different opening control can be set for each traffic direction: SbS (Step-by-Step) to enter, SbS 2 (input Open) to exit. Two traffic lights with red and green signals must be installed and connected to the OGI (terminal 9) and CL (terminal 8) outputs: - with the SbS control, the OGI output is activated: green light going in and red light going out - with the SbS 2 control, the CL output is activated: green light going out and red light going in. **Light off** indicates that the boom is closed. **Green light** indicates that the boom is open and the way is clear. **Red light** indicates that the boom is open and the way is not clear. **Amber light** (both lights on) indicates that the boom is closing or that the way is not monitored. The OGI and CL outputs can control small lamps with 24 V ⎓ (total maximum of 10 W per output). If you need to use lamps with higher wattage, you must use relays driven by outputs on the control unit which in turn control the traffic lights. see "***Figure 42***".
ON-ON	Oview (Red/green traffic light)	Function defined by Oview. Red/green traffic light default: **Green light lit** when the boom is open and stationary, off for all the other positions (Terminal 9). **Red light lit** when the boom is closed and stationary, off for all the other positions (Terminal 8).
Switch 11	**Function**	**Description**
ON	Discharge	Discharge is enabled both when opening and closing with times set in Oview. This is useful for faster departures and impact tests.
OFF		Discharge not enabled.
Switch 12	**Function**	**Description**
ON	Oview (Photo Test)	Function defined by Oview. Photo Test default: The 24 V output (terminal 7) performs the photo test function to verify the correct operation of the photocells.
OFF		Fixed 24 V output on terminal 7.

PROGRAMMING PARAMETERS		
Switches 13-14	**Function**	**Description**
OFF-OFF	Test mode	In this mode it is possible to save the ALT status, the positions, the configuration of all the switches and values for Speed, Force, LowS and LowF trimmers. The Pause trimmer is not saved. In this mode the control unit uses the values read from the trimmer in real time. In this way adjustments can be carried out with the boom in movement.
ON-OFF	Not allowed	The control unit completes the manoeuvre under way and does not allow other manoeuvres until it returns to a valid configuration.
OFF-ON	Not allowed	The control unit completes the manoeuvre under way and does not allow other manoeuvres until it returns to a valid configuration.
ON-ON	Programming block	The control unit memorises and blocks the trimmers and switches.

Note 1 If, during the closing manoeuvre, one of the devices connected to the PHOTO input intervenes, an Automatic Closure is activated which causes an opening, then a pause and a closing.

Note 2 If, during the pause, one of the devices connected to the PHOTO input intervenes, the timer is reset with a new value. - If one of the devices connected to the STOP input intervenes, the re-closing function will be reset and replaced by the Stop status.

Note 3 If an opening control is submitted in hold-to-run mode, when the boom reaches its maximum opening it will remain still until the control button is released and then a closing manoeuvre can be performed.

Note 4 If a closing control is submitted in hold-to-run mode, when the boom reaches its maximum closure it will remain still until the control button is released and then an opening manoeuvre can be performed.

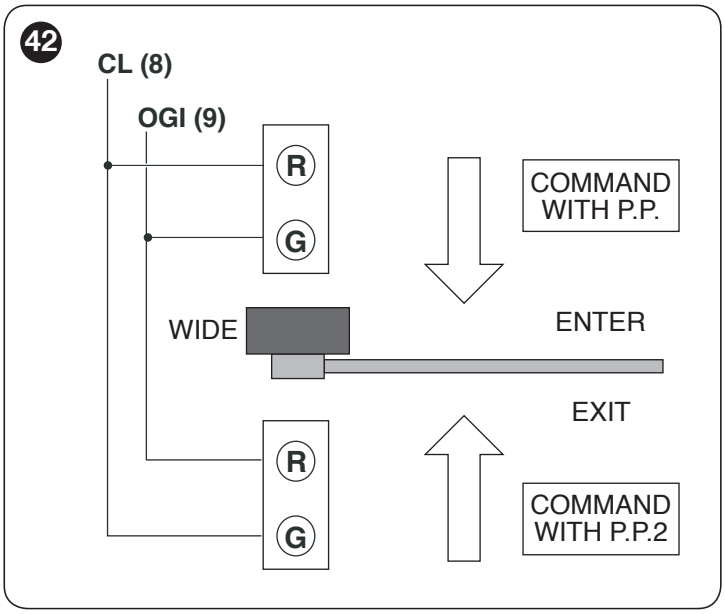

7.4 MEMORISING THE TRANSMITTERS

The control unit incorporates a radio receiver compatible with all transmitters that adopt the following NICE radio encoding protocols: **FLO**, **FLOR**, **O-CODE** and **SMILO**.

7.4.1 Procedure for memorising transmitter buttons

Among the available procedures for memorising transmitters, some allow for memorising in “standard” mode (or Mode 1) and others in “custom” mode (or Mode 2).

7.4.1.1 STANDARD memorisation (Mode 1: all buttons)

Procedures of this type allow for simultaneously memorising – during their execution – **all the buttons** present on the transmitter. The system automatically associates each button with a pre-defined command, according to the “***Table 7***” and the “***Table 8***”:

Table 7

SMXI / SMXIS OR OXI / OXIFM / OXIT / OXITFM IN MODE 1 OR MODE 2	
Receiver output	**Command**
Output No. 1	“Step-by-Step”
Output No. 2	"Stop"
Output No. 3	“Open”
Output No. 4	“Close”

Table 8

OXI / OXIFM /OXIT / OXITFM IN MODE 2 EXTENDED		
No.	**Command**	**Description**
1	**Step-by-Step**	“SbS” (Step-by-Step) command
2	**Stop**	“Stop” command
3	**Open**	“Open” command
4	**Close**	“Close” command
5	**CL**	The “Courtesy light” output switches on with timer-based switching off
6	**Radio channel 1**	Can be associated with an output
7	**Radio channel 2**	Can be associated with an output

7.4.1.2 CUSTOM memorisation (Mode 2: one button only)

Procedures of this type allow for memorising – during their execution – **a single button** among those present on the transmitter. The possible combinations are: **Step-by-Step**, **STOP**, **OPEN**, **CLOSE**.
The installer decides which button to associate with the command on the basis of the automation’s needs.

7.4.2 Number of transmitters that can be memorised

The control unit’s receiver has 100 memory locations. A location can memorise either a single transmitter (i.e. the combination of its buttons and commands) or a single button with the relative command.

7.4.3 Transmitter memorisation and deletion procedures

To perform the procedures A, B, C and D described below, the control unit's memory must be unlocked. If the memory is locked, perform the unlocking procedure described in the *"LOCKING AND UNLOCKING THE MEMORY"* paragraph

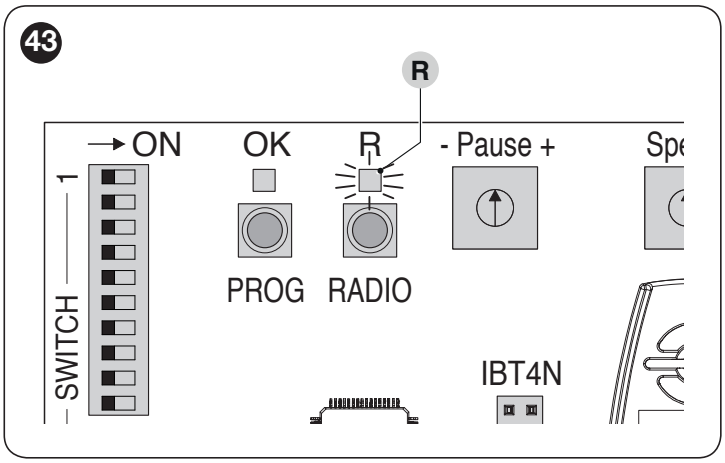

7.4.3.1 PROCEDURE A - Memorising ALL buttons of a single transmitter (STANDARD mode or Mode 1)

To perform this procedure:

1. **on the control unit:** press and hold the "**RADIO**" button until the "**R**" LED lights up
2. release the "**RADIO**" button
3. (within 10 seconds) **on the transmitter to be saved:** press and hold any button and wait until the "**R**" LED emits 3 long flashes (= transmitter saved correctly)
4. release the transmitter button.

After the 3 long flashes a further 10 seconds remain to memorise an additional transmitter (if desired), starting from step 3.

The "R" LED can also emit the following signals: 1 fast flash, if the transmitter is already saved, 6 flashes, if the transmitter's radio encoding system is not compatible with that of the control unit's receiver, or 8 flashes, if the memory is full.

7.4.3.2 PROCEDURE B - Memorising a SINGLE BUTTON of a transmitter (CUSTOM mode or Mode 2)

To perform this procedure:

1. choose the command to be paired with the relevant button to be memorised:
   - for no. 1 - "Step-by-Step" press the "**RADIO**" button **once**
   - for no. 2 - "STOP" press the "**RADIO**" button twice
   - for no. 3 - "OPEN" press the "**RADIO**" button **3 times**
   - for no. 4 - "CLOSE" press the "**RADIO**" button **4 times**
2. **on the control unit:** press and release the "**RADIO**" button for a number of times corresponding to the desired control, as shown near the control selected beforehand at step 1.
3. (within 10 seconds) **on the transmitter**: press and hold the button to be saved and wait for the "**R**" LED to emit 3 long flashes (= transmitter saved correctly)
4. release the transmitter button.

After the 3 long flashes a further 10 seconds remain to memorise an additional button (if desired), starting from step 1.

The "R" LED can also emit the following signals: 1 fast flash, if the transmitter is already saved, 6 flashes, if the transmitter's radio encoding system is not compatible with that of the control unit's receiver, or 8 flashes, if the memory is full.

7.4.3.3 PROCEDURE C - Memorising a transmitter by means of another transmitter already memorised (memorisation far from the control unit)

This procedure allows to save a new transmitter by means of a second transmitter already saved in the same control unit. This allows the new transmitter to receive the same settings as the transmitter that was already saved. The procedure does not entail any direct action on the "**RADIO**" button of the control unit, but its mere execution within its reception range.

To perform this procedure:

1. **on the transmitter to be memorised:** press and hold the button to be memorised
2. **on the control unit**: after a few seconds (roughly 5) the "**R**" LED lights up
3. release the transmitter button
4. **on the transmitter already memorised:** press and slowly release 3 times the memorised button to be copied
5. **on the transmitter to be saved:** press and hold the same button pressed at step 1 and wait for the "**R**" LED to emit 3 long flashes (= transmitter saved correctly)
6. release the transmitter button.

The "R" LED can also emit the following signals: 1 fast flash, if the transmitter is already saved, 6 flashes, if the transmitter's radio encoding system is not compatible with that of the control unit's receiver, or 8 flashes, if the memory is full.

7.4.3.4 PROCEDURE D - Deleting a single transmitter (if memorised in Mode 1) or a single transmitter button (if memorised in Mode 2)

To perform this procedure:

1. **on the control unit**: press and hold the "**RADIO**" button
2. after roughly 4 seconds, the "**R**" LED will light up steady (continue holding down the "**RADIO**" button)
3. **on the transmitter to be deleted:** press and hold a button **(*)** until the "**R**" LED (on the control unit) emits 5 fast flashes (or 1 flash if the transmitter or button is not saved).
4. press and release the "**RADIO**" button.

(*) If the transmitter is memorised in **Mode 1**, any button can be pressed and the control unit will delete the entire transmitter. If the transmitter is memorised in **Mode 2**, it is necessary to press the memorised button to be deleted. To delete further buttons memorised in Mode 2, repeat the entire procedure for every button to be deleted.

7.4.3.5 PROCEDURE E - Deleting ALL memorised transmitters

To perform this procedure:

1. **on the control unit**: press and hold the "**RADIO**" button
2. after roughly 4 seconds, the "**R**" LED will light up steady (continue holding down the "**RADIO**" button)
3. after roughly 4 seconds, the "**R**" LED will turn off (continue holding down the "**RADIO**" button)
4. when the "**R**" LED starts flashing, count 2 flashes and prepare to release the button precisely during the 3rd flash that follows
5. during the deletion process, the "**R**" LED will flash quickly
6. the "**R**" LED will emit 5 long flashes to signal that the deletion has been completed correctly.

7.5 LOCKING AND UNLOCKING THE MEMORY

WARNING! - This procedure locks the memory, preventing the execution of Procedures A, B, C and D described in the "*Transmitter memorisation and deletion procedures*" paragraph

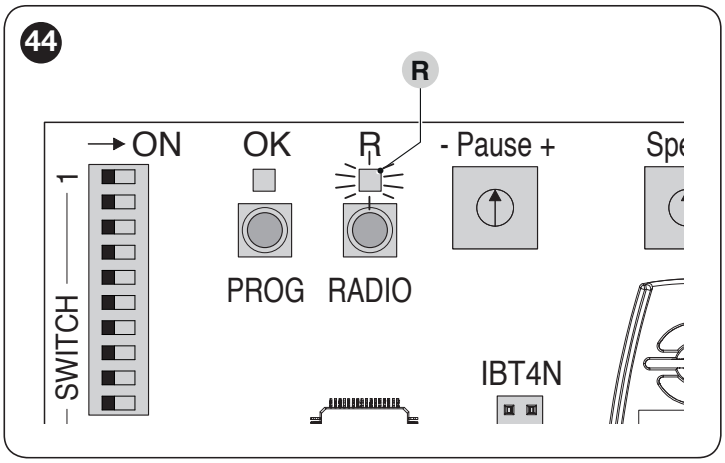

Procedure for locking/unlocking the memory:

1. disconnect the control unit from the power supply
2. press and hold the "**RADIO**" button
3. power the control unit again (by pressing down the "**RADIO**" button)
4. after 5 seconds the "**R**" LED will emit 2 slow flashes
5. release the "**RADIO**" button
6. (within 5 seconds) repeatedly press the "**RADIO**" button to select one of the following options:
   - disabling of the memory lock function = **LED off**
   - enabling of the memory lock function = **LED on**
7. five seconds after last pressing the button, the "**R**" LED will emit 2 slow flashes to signal the end of the procedure.

7.6 SPECIAL FUNCTIONS

7.6.1 "Move anyway" function

This function can be used to operate the automation even one or more some safety devices fail to work properly or are out of order. The automation can be controlled in "**hold-to-run**" mode by proceeding as follows:

1. send a command to move the gate, using a transmitter or key selector, etc. If everything works properly, the boom will move normally, otherwise proceed with point 2
2. within 3 seconds, press the control again and hold it down
3. after roughly 2 seconds, the boom gate will complete the requested manoeuvre in "**Hold-to-run**" mode, in other words, it will continue to move so long as the control is held down.

When the safety devices fail to work, the "OK" LED on the control unit will flash a few times to signal the type of problem. To verify the type of anomaly, consult the "*Signals on the control unit*" chapter.

7.6.2 "Maintenance notice" function

This function warns the user when the automation requires a maintenance check.
The "Maintenance notice" parameter can be adjusted using the **Oview** programmer.
The maintenance request signal is given through the Flash warning light or by the maintenance indicator, depending on the type of programming chosen.

The OGI output and the configured courtesy light give the signals indicated in "*Table 9*" based on the number of manoeuvres completed with respect to the set limit.

Table 9

MAINTENANCE NOTICE THROUGH FLASH AND MAINTENANCE INDICATOR		
Number of manoeuvres	**Signal on "Flash"**	**Maintenance indicator signal**
Below 80% of the limit	Normal (0.5 sec on, 0.5 sec off)	Lit for 2 seconds at the start of the opening manoeuvre
Between 81% and 100% of the limit	Remains lit for 2 seconds at the start of the manoeuvre	Flashes for the entire duration of the manoeuvre
Exceeding 100% of the limit	Remains lit for 2 seconds at the start and end of the manoeuvre then carries on normally	Flashes always

7.6.3 Verifying the number of manoeuvres completed

The number of manoeuvres completed can only be checked through the **Oview** programmer.

7.6.4 Manoeuvre counter resetting

Once maintenance has been performed on the system, the manoeuvre counter must be reset.
Resetting can only be done through the **Oview** programmer.

8 TROUBLESHOOTING... (troubleshooting guide)

8.1 TROUBLESHOOTING

The table below contains useful instructions to resolve any malfunctions or errors that may occur during installation or in case of a fault.

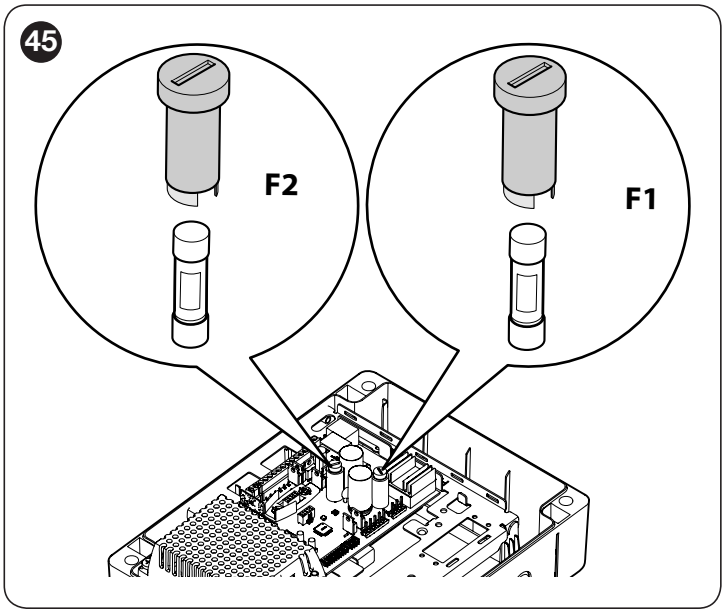

Table 10

TROUBLESHOOTING	
Problems	**Recommended checks**
The radio transmitter does not control the gate and the LED on the transmitter does not light up	Check whether the transmitter batteries are exhausted and replace them if necessary.
The radio transmitter does not control the gate but the LED on the transmitter lights up	Check whether the transmitter has been memorised correctly in the radio receiver.
No manoeuvre is commanded	Check that the gearmotor is being powered with the mains voltage Check whether fuses **F1** and **F2** are blown; if they are, identify the cause of the failure then replace the fuses with others having the same current rating and characteristics.
No manoeuvre starts and the warning light is off	Check that the control is actually received. If the control reaches the Step-by-Step input, the corresponding "**SbS**" LED must light up; if instead the radio transmitter is used, the "**OK**" LED must emit two quick flashes.
The manoeuvre starts but is immediately followed by a reverse run	The selected force could be too low for this type of boom. Verify that the boom is correctly balanced and select a higher force, if necessary.
The manoeuvre is carried out at slow speed	The manoeuvre does not start from one of the limit switches or the control unit does not learn the limit switch. Check the electrical connection of the limit switch.
The manoeuvre is carried out in the opposite direction	Check that the gearmotor is connected (see paragraph "***Checking the boom's movement***").

8.2 SIGNALS ON THE CONTROL UNIT

The LEDs near the control unit's terminals issue special signals to indicate both normal operation and any anomalies.
The following table describes the causes and solutions for each type of signal.

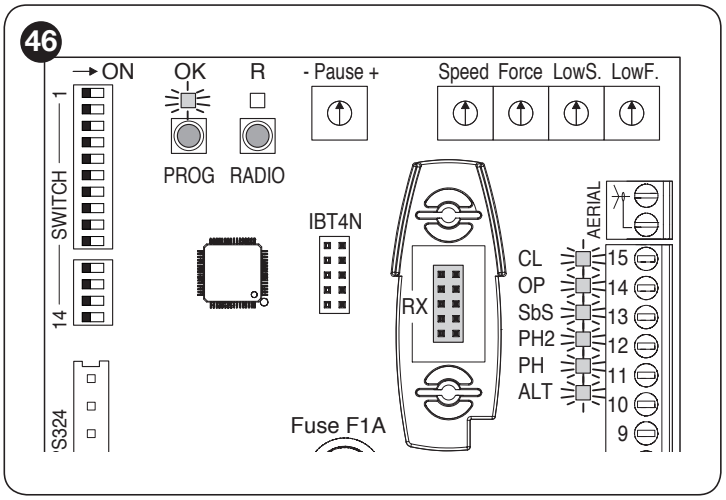

Table 11

TERMINAL LEDS ON THE CONTROL UNIT		
Status	**Meaning**	**Possible solution**
OK LED		
OFF	Anomaly	Check for the presence of power; check that the fuses are not blown; if necessary, identify the cause of the fault, then replace the fuses with other fuses having the same specifications.
On	Serious anomaly	There is a serious anomaly; try switching off the control unit for a few seconds; if the condition persists, it means that there is a fault and the electronic circuit board must be replaced.
1 flash per second	Everything normal	Normal control unit operation.
2 fast flashes 1-second pause 2 fast flashes	Intervention of a photocell	At the start of the manoeuvre, one or more photocells are blocking the movement; check whether there are any obstacles. During the manoeuvre, this is normal if an obstacle is present.
3 fast flashes 1-second pause 3 fast flashes	Obstacle along the travel between one limit switch and the other	During the gate's movement, the motors encountered more resistance. Verify the cause and increase the motor force if necessary.
4 fast flashes 1-second pause 4 fast flashes	Intervention of the ALT (STOP) input	At the start of the manoeuvre or during the movement itself, the ALT (STOP) input intervened. Identify the cause.
5 fast flashes 1-second pause 5 fast flashes	The manoeuvre does not start or stops due to a hardware problem in the motor control stage	Wait at least 30 seconds then try giving a command and disconnect the power supply if necessary. If the condition persists, there may be a serious malfunction and the electronic board needs to be replaced.
6 fast flashes 1-second pause 6 fast flashes	The limit operating temperature has been exceeded	Wait for a few minutes until the temperature drops under the maximum limit.
STOP LED		
OFF	Intervention of one of the devices connected to the STOP input	Check the devices connected to the STOP input.
On	Everything normal	Stop input active.
PH LED		
OFF	Intervention of one of the devices connected to the PHOTO input	Check the devices connected to the PHOTO input.
On	Everything normal	Photo input active.
PH2 LED		
OFF	Intervention of one of the devices connected to the PHOTO2 input	Check the devices connected to the PHOTO2 input.
On	Everything normal	Photo2 input active.
SbS LED		
OFF	Everything normal	Step-by-Step input inactive.
On	Intervention of Step-by-Step input	It is normal if one of the devices connected to the Step-by-Step input is active.

TERMINAL LEDS ON THE CONTROL UNIT		
Status	**Meaning**	**Possible solution**
OP LED		
OFF	Everything normal	Open input not active.
On	Intervention of Open input	It is normal if one of the devices connected to the Open input is active.
CL LED		
OFF	Everything normal	Open input not active.
On	Intervention of Close input	It is normal if one of the devices connected to the Close input is active.
FCA LED		
OFF	Intervention of the limit switch	The boom is in the opening position.
On	No intervention of the limit switch	The boom is in a position other than the opening position.
FCC LED		
OFF	Intervention of the limit switch	The boom is in the closing position.
On	No intervention of the limit switch	The boom is in a position other than the closing position.

9 FURTHER INFORMATION (Accessories)

9.1 CONNECTING AN SM-TYPE RADIO RECEIVER

The control unit has a slot for mounting radio receivers with SM connector (optional accessories) belonging to the SMXI, OXI, etc. families, which can be used to remotely control the control unit through transmitters that intervene on the unit's inputs.

Before installing a receiver, disconnect the power supply to the control unit.

To install a receiver ("***Figure 47***"):

1. insert the receiver (**A**) in the appropriate slot (**B**) on the control unit's electronic board.

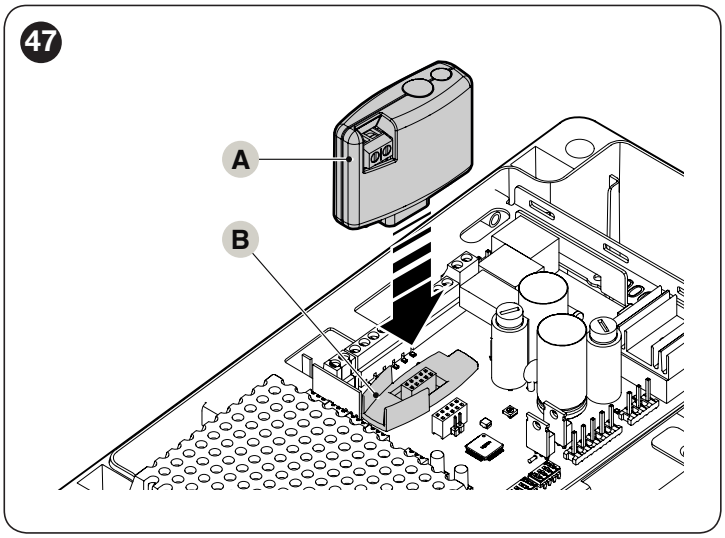

The association between the radio receiver output and the control performed by the motor is shown in "***Table 12***":

For further information, consult the specific manual of the receiver.

Table 12

SMXI / SMXIS OR OXI / OXIFM / OXIT / OXITFM IN MODE 1 OR MODE 2	
Receiver output	**Command**
Output No. 1	"Step-by-Step"
Output No. 2	"Stop"
Output No. 3	"Open"
Output No. 4	"Close"
Output No. 5	Courtesy light
Output No. 6	Radio channel 1
Output No. 7	Radio channel 2

9.2 CONNECTING AND INSTALLING THE BACK-UP BATTERY

The electrical connection of the battery to the control unit must be made only after completing all the installation and programming stages, as the battery is an emergency power supply.

Before installing a back-up battery, disconnect the power supply to the control unit.

To install and connect the battery:

1. unhook the control unit box from its position
2. open the box
3. access the battery compartment by releasing the catch (**A**) and lifting the part (**B**)

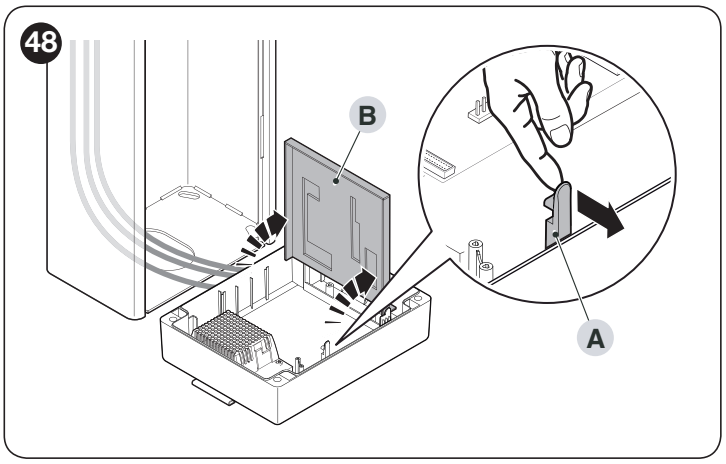

4. house the battery (**C**)
5. close the part (**B**) securing it to the catch (**A**)

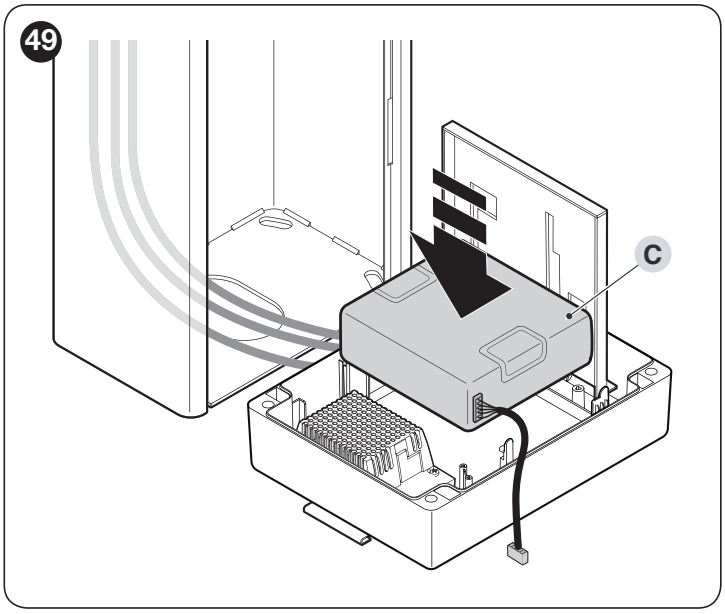

6. connect the battery to the dedicated terminal

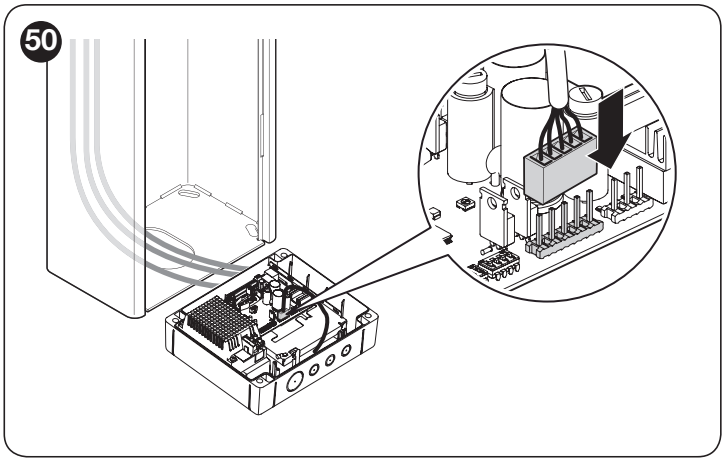

7. close the box on the control unit and re-attach it to the housing.

9.3 CONNECTING THE OVIEW PROGRAMMER

The "**Oview**" programming unit can be connected to the control unit.
This unit allows for rapidly and fully programming the functions, adjusting the parameters, updating the control unit firmware, running the diagnostics to detect any malfunctions and performing routine maintenance.
The "**Oview**" allows for operating on the control unit at a maximum distance of roughly 100 m. If several control units are networked with each other in a "BusT4" network, by connecting the "**Oview**" to one of these units, it is possible to view on the display all the networked control units (up to a maximum 16 units).
The "**Oview**" unit can also be left connected to the control unit during normal operation of the automation, so that the user can send commands using a specific menu.

Before connecting the IBT4N interface, it is necessary to disconnect the control unit from the power supply.

To install the interface:
1. remove the upper cover (**A**) of the boom gate cubicle
2. slide out the rear panel first towards the other and then outwards

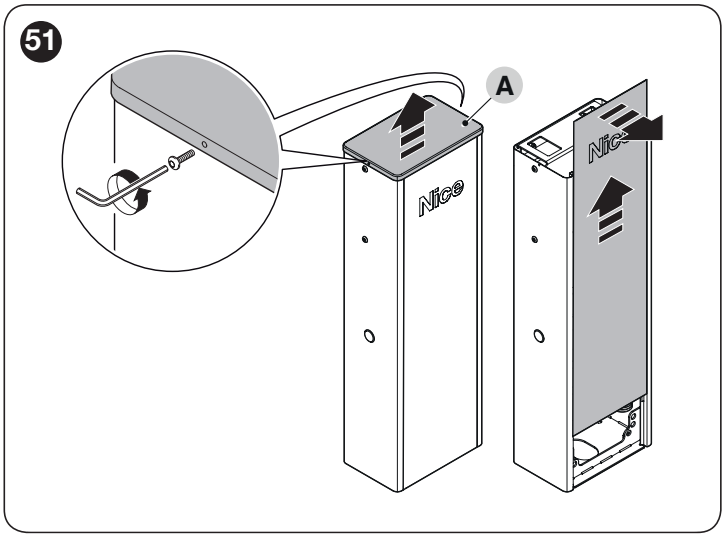

3. place the interface (**B**) in the appropriate slot (**C**) on the control unit's electronic board
4. insert the cable (**D**) in the appropriate slot (**E**) on the interface.

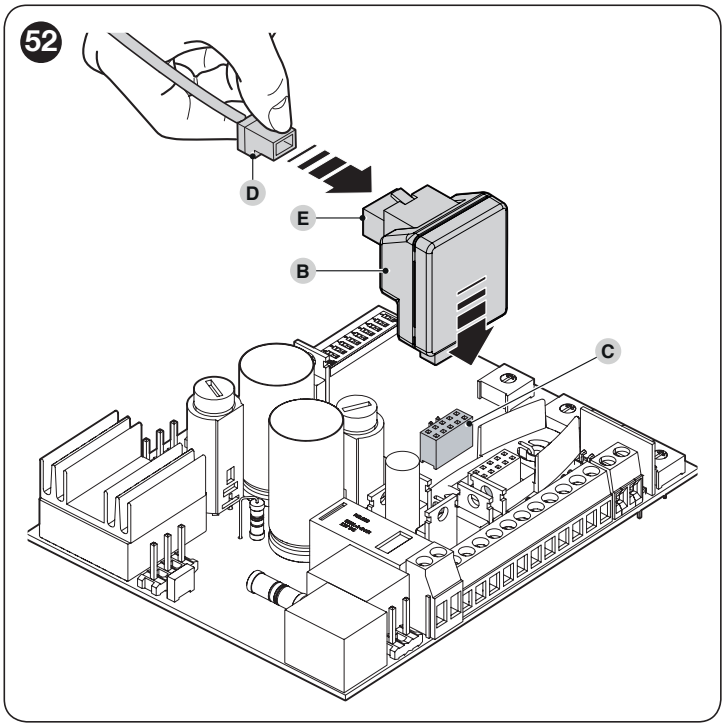

At this stage, the control unit can be powered again.

For further information, consult the specific manuals of the connected devices.

9.4 CONNECTING THE BOOM LIGHTS (OPTIONAL ACCESSORY)

To perform the installation:

1. put the boom in the vertical position
2. loosen the 4 screws that fasten the boom cover (**A**)

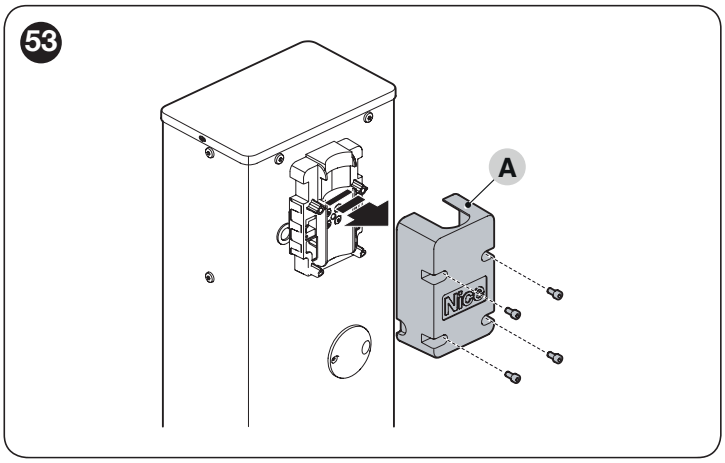

3. remove the boom temporarily
4. insert the cable grommet through the specially configured hole (**B**)

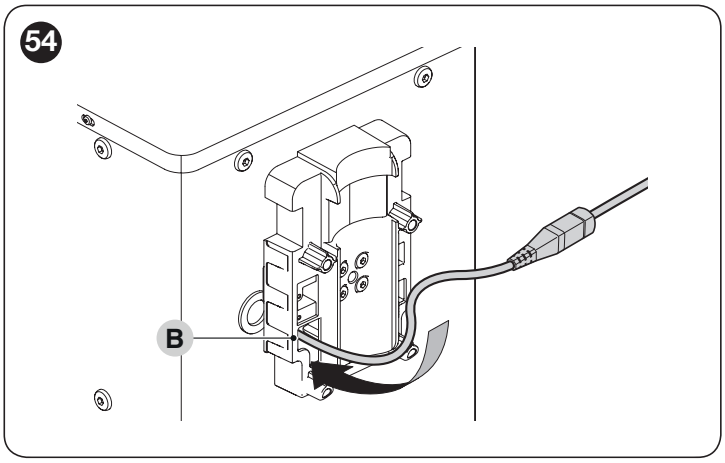

5. feed the lights cable (**C**) through the rubber impact protector and, if necessary, use a fish tape to facilitate the operation

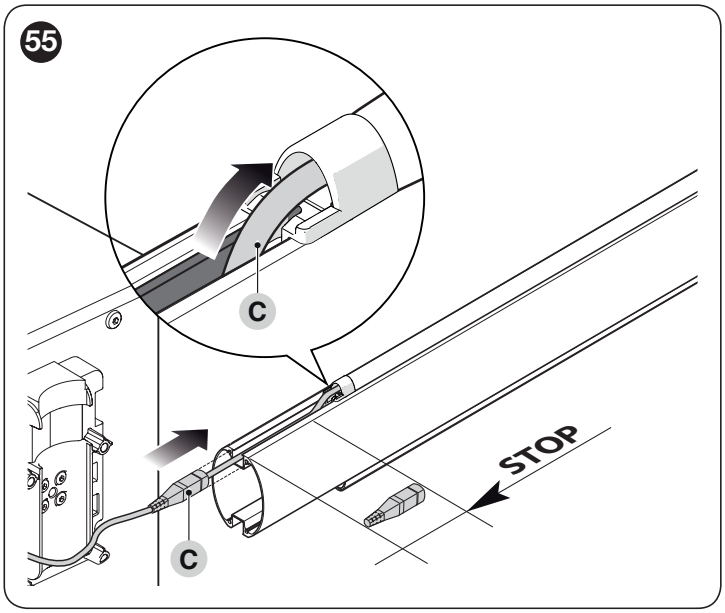

6. if necessary, shorten the lights cable by cutting it only in one of the points indicated by an appropriate mark. After cutting the cable, the cap of the cut end must be shifted to close the new end
7. insert the wiring cable first through the hole on the boom support then through the hole in the cubicle

leave a bit of cable inside the boom support, so that the boom can be rotated without causing any tension along the cable.

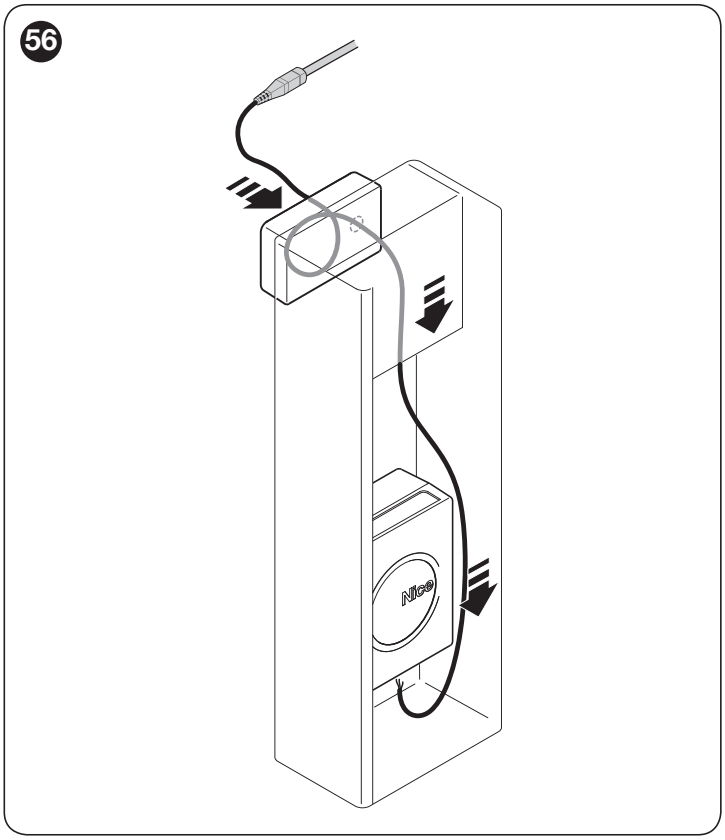

8. connect the lights cable to terminals 3-4 on the control unit

The output has poles: if the lights fail to switch on according to the settings, the cables connected to the terminal must be inverted.

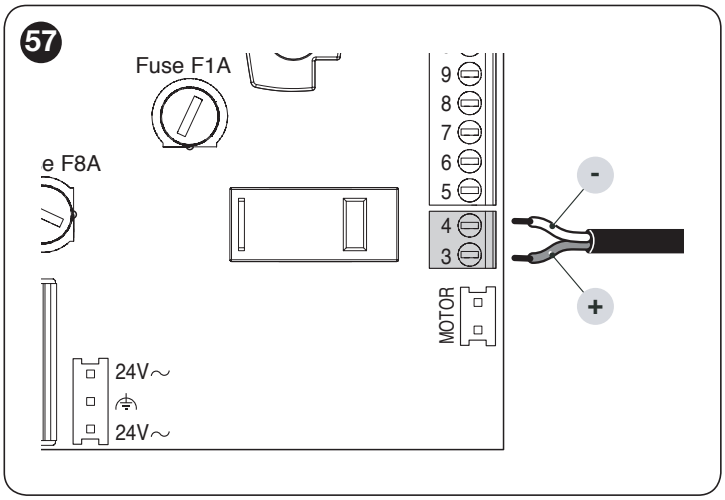

9. position and lock the connector inside the slot on the boom

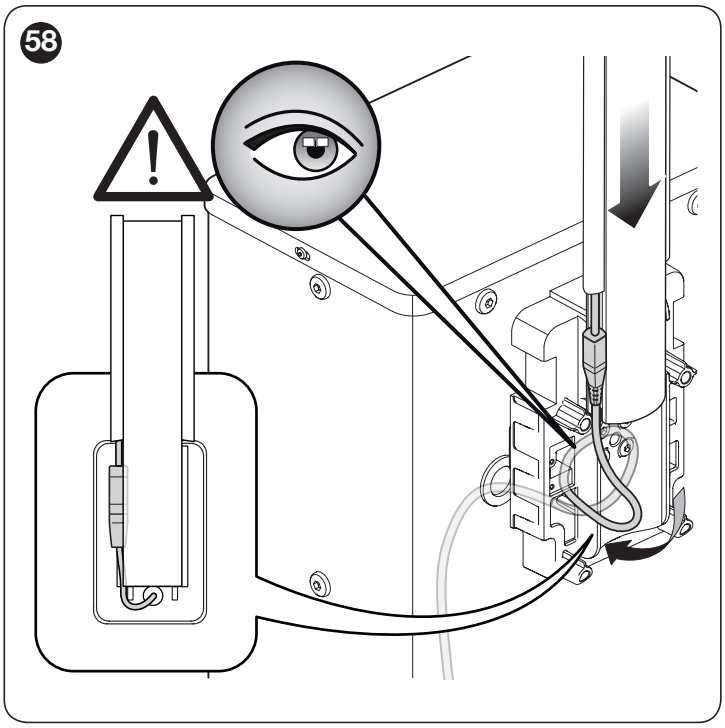

10. insert the boom and lock it with its cover, by vigorously tightening the 4 screws and being careful not to pinch the cable.

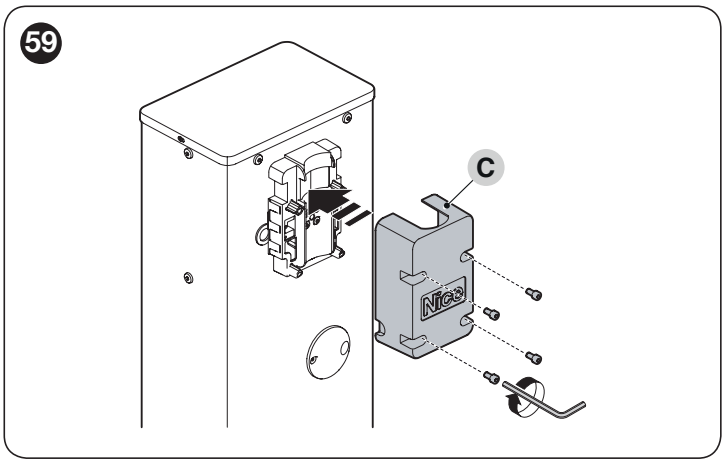

9.4.1 Photocells

You can install one of the photocells inside the barrier mechanism in the space provided.
To perform the installation:

1. remove the card of the photocell (**A**) from its box by levering with a screwdriver. **Take care not to damage the electrical components.**
2. open the box prepared for the photocells (**B**) provided

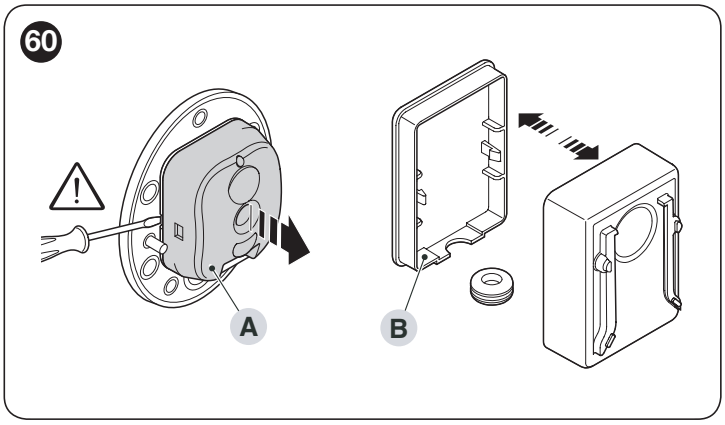

3. secure the card into the back of the box
4. drill through the rubber part (**C**) prepared for passing the cables
5. pass the photocell connection cable through the rubber part
6. connect it to the photocell card (see "***Figure 32*** e ***33***").

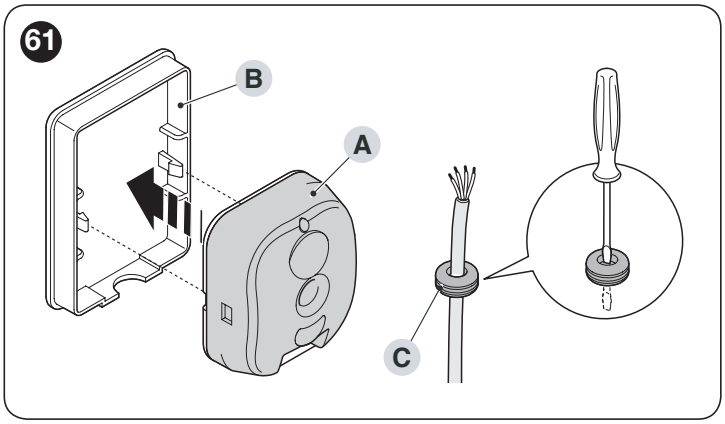

7. close the box with the cover, blocking the rubber part inside its housing
8. hook the box over the lens (**D**) inside the cabinet, sliding it from the top downwards.

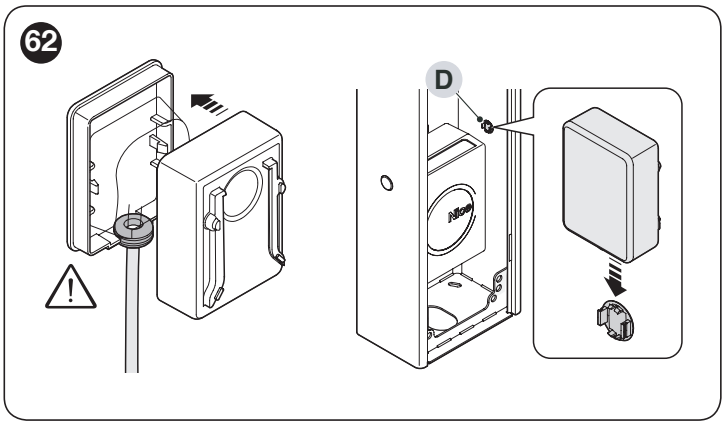

For further information, refer to the instruction manual for the photocells.

10 PRODUCT MAINTENANCE

The automation must be subjected to regular maintenance to keep its safety level constant and guarantee long-lasting operation; to this aim, **WIDE** has a manoeuvre counter and maintenance warning system; refer to the "***"Maintenance notice" function***" paragraph.

Maintenance must be carried out strictly in compliance with the safety provisions provided in this manual and in accordance with the laws and regulations in force.

To carry out maintenance on the gearmotor:

1. Schedule maintenance interventions within maximum 6 months or after maximum 20.000 manoeuvres from the previous maintenance intervention
2. disconnect all power supplies, including any back-up batteries
3. check for any deterioration in the materials making up the automation, with special emphasis on erosion or oxidation of the structural parts; replace any parts that are not to standard
4. check the state of wear of moving parts: pinion, rack and all gate leaf components; replace any worn parts
5. connect the power supplies again and run all the tests and checks described in the "***Testing***" paragraph.

11 PRODUCT DISPOSAL

This product is an integral part of the operator and must therefore be disposed of with it.

As with the installation, only qualified personnel must dismantle the product at the end of its life.
This product is composed of different types of materials. Some of these materials can be recycled; others must be disposed of. Please enquire about the recycling or disposal systems in place in your local area for this type of product.

WARNING

Some parts of the product may contain polluting or dangerous substances. If not disposed of correctly, these substances may have a damaging effect on the environment and human health.

As indicated by the symbol shown here, this product must not been disposed of with household waste. Separate the waste for disposal and recycling, following the methods stipulated by local regulations, or return the product to the seller when purchasing a new product.

WARNING

Local regulations may impose heavy penalties if this product is not disposed of in compliance with the law.

12 TECHNICAL SPECIFICATIONS

All technical specifications stated in this section refer to an ambient temperature of 20°C (± 5°C). Nice S.p.A. reserves the right to apply modifications to the product at any time when deemed necessary, without altering its functions and intended use.

Table 13

TECHNICAL SPECIFICATIONS			
Description	**Technical specification**		
	WIDES - WIDESI	**WIDEM - WIDEMI - WIDEMS**	**WIDEL - WIDELI - WIDELS**
Product type	Boom gate for residential use inclusive of electronic control unit		
Power supply	220-230V~ 50/60Hz		
Maximum power consumption (W)	300	300	360
Maximum current draw (A)	1	1,1	1,2
Current draw in stand-by	8 mA - 24 V⎓		
Minimum opening time (sec)	4	3,5	5
Rated torque (Nm)	100	140	200
Maximum frequency of operating cycles/hour (at nominal torque)	100	300	200
Services power output	24 V⎓ maximum current 200 mA (the voltage may vary between 16 V and 33 V⎓)		
Emergency power supply	With optional accessory PS324		
Photo test output	24 V⎓ maximum current 100 mA (the voltage may vary between 16 V and 33 V⎓), connect Nice photocells exclusively		
Flash output	for 1 ML24 or ML24T flashing light (maximum lamp power = 25 W)		
Courtesy light output	24V lamp output (max 10 W)		
OGI output	for 24 V (max 10 W) indicator light		
Alt input	Configuration of "ALT" input (NC, NO, 8k2, 4k1) with default NC.		
Step-By-Step input	For normally open contacts		
Open input	For normally open contacts		
Close input	For normally open contacts		
Radio connector	SM connector for SMXI, SMXIS, OXI and OXIT receivers		
Radio ANTENNA input	50 Ω for RG58-type cable or similar		
Adjustable functions	using the trimmers (see chapter "***Adjusting the trimmers***") and micro switches (see chapter" ***Programming the control unit***")		
Use in highly acid, saline or potentially explosive atmosphere	No		
Operating temperature	-20°C ÷ 55°C		
Protection rating	IP54		
Dimensions and weight	280x178x1000h mm; 40 kg	320x205x1000h mm; 46 kg	420x205x1030h mm; 54 kg

Table 14

TECHNICAL SPECIFICATIONS			
Description	**Technical specification**		
	WIDES/V1 - WIDESI/V1	**WIDEM/V1 - WIDEMI/V1**	**WIDEL/V1 - WIDELI/V1**
Product type	Road barrier for residential, public and industrial use		
Power supply	120V~ 50/60Hz		
Maximum power consumption (W)	300	300	360
Maximum current draw (A)	2	2,2	2,4
Current draw in stand-by	8 mA - 24 V⎓		
Minimum opening time (sec)	4	3,5	5
Rated torque (Nm)	100	140	200
Maximum frequency of operating cycles/hour (at nominal torque)	100	300	200
Services power output	24 V⎓ maximum current 200 mA (the voltage may vary between 16 V and 33 V⎓)		
Emergency power supply	With optional accessory PS324		
Photovoltaic power supply	No		
Photo test output	24 V⎓ maximum current 100 mA (the voltage may vary between 16 V and 33 V⎓), connect Nice photocells exclusively		
Flash output	for 1 ML24 or ML24T flashing light (maximum lamp power = 25 W)		
Courtesy light output	24V lamp output (max 10 W)		
OGI output	for 24 V (max 10 W) indicator light		
Alt input	Configuration of "ALT" input (NC, NO, 8k2, 4k1) with default NC.		
Step-By-Step input	For normally open contacts		
Open input	For normally open contacts		
Close input	For normally open contacts		
Radio connector	SM connector for SMXI, SMXIS, OXI and OXIT receivers		
Radio ANTENNA input	50 Ω for RG58-type cable or similar		
Adjustable functions	using the trimmers (see chapter "***Adjusting the trimmers***") and micro switches (see chapter" ***Programming the control unit***")		
Use in highly acid, saline or potentially explosive atmosphere	No		
Operating temperature	-20°C ÷ 55°C		
Protection rating	IP54		
Dimensions and weight	280x178x1000h mm; 40 kg	320x205x1000h mm; 46 kg	420x205x1030h mm; 54 kg

EU Declaration of Conformity

and declaration of incorporation of "partly completed machinery"

Note - The contents of this declaration correspond to declarations in the official document deposited at the registered offices of Nice S.p.a. and in particular to the last revision available before printing this manual. The text herein has been re-edited for editorial purposes. A copy of the original declaration can be requested from Nice S.p.a. (TV) I.

Number: 561/WIDE **Rev:** 5 **Language:** EN

Manufacturer's Name: Nice s.p.a.
Address: Via Callalta 1, 31046 Oderzo (TV) Italy
Authorized Person to constitute technical documentation: Nice s.p.a.
Type of product: Electromechanical barrier gate
Model/Type: WIDES, WIDESI, WIDEM, WIDEMI, WIDEMS, WIDEL, WIDELI, WIDELS
Accessories: Refer to the catalog

The undersigned Roberto Griffa, in the role of Chief Executive Officer, declares under his sole responsibility that the product described above complies with the provisions laid down in the following directives:

- Directive 2014/53/EU (RED), according to the following harmonized standards: Health protection standards (art. 3(1)(a)) EN 62479:2010, Electrical safety (art. 3(1)(a)) EN 60950-1:2006+A11:2009+A12:2011+A1:2010+A2:2013, Electromagnetic compatibility (art. 3(1)(b)) EN 301 489-1 V2.2.0:2017, EN 301 489-3 V2.1.1:2017, Radio spectrum (art. 3(2)) EN 300 220-2 V3.1.1:2017.

The product also complies with the following directives according to the requirements envisaged for "partly completed machinery" (Annex II, part 1, section B):

- Directive 2006/42/EC of the EUROPEAN PARLIAMENT AND COUNCIL of 17 May 2006 related to machinery and amending the Directive 95/16/EC (recast).

It is hereby stated that the relevant technical documentation has been compiled in accordance with annex VII B of Directive 2006/42/EC and that the following essential requirements have been fulfilled: 1.1.1 - 1.1.2 - 1.1.3 - 1.2.1 - 1.2.6 - 1.5.1 - 1.5.2 - 1.5.5 - 1.5.6 - 1.5.7- 1.5.8 - 1.5.10 - 1.5.11
The manufacturer undertakes to transmit to the national authorities, in response to a reasoned request, the relevant information on the " partly completed machinery ", while maintaining full rights to the related intellectual property.
Should the " partly completed machinery" be put into service in a European country with an official language other than that used in this declaration, the importer is obliged to arrange for the relative translation to accompany this declaration.
The "partly completed machinery" must not be used until the final machine in which it is incorporated is in turn declared as compliant, if applicable, with the provisions of directive 2006/42/EC.

The product also complies with the following standards:
EN 60335-1:2012+A11:2014, EN 62233:2008, EN 60335-2-103:2015, EN 61000-6-2:2005, EN 61000-6-3:2007+A1:2011

Oderzo, 12/12/2018

Ing. Roberto Griffa
(Chief Executive Officer)

INSTRUCTIONS AND WARNINGS FOR THE USER

Before using the automation for the first time, ask the installer to explain the origin of any residual risks and take a few minutes to read this instruction manual and warnings for the user given to you by the installer. Store the manual for future reference and hand it to the new owner when transferring the automation.

WARNING!

Your automation is a machine that faithfully executes commands imparted by the user. Negligence and improper use may lead to dangerous situations:

- do not manoeuvre the gate if there are people, animals or objects within its range of operation
- it is strictly forbidden to touch parts of the automation while the boom is moving
- the photocells are not a safety device but only an auxiliary aid to safety. They are built using highly reliable technology but, in extreme conditions, may malfunction or even become defective. In certain cases, the defect may not be clearly evident. For these reasons, it is important to follow all the instructions given in this manual when using the automation
- periodically check that the photocells work properly.

IT IS STRICTLY FORBIDDEN to transit while the boom is moving! Transit is allowed only if the boom is fully open and stationary.

CHILDREN

An automation system guarantees a high degree of safety. With its detection systems, it can control and guarantee the gate's movement in the presence of people or objects. It is nonetheless advisable to forbid children from playing near the automation and not to leave remote controls near them to prevent any unwanted activation of the system. The automation is not a toy!

The product is not intended for use by persons, including children, with limited physical, sensory or mental capacities, or who lack experience or knowledge, unless supervised or trained in the use of the product by a person responsible for their safety.

Anomalies: if the automation shows any signs of anomalous behaviour, disconnect the power supply to the system and manually unlock the motor (see instructions at the end of the chapter) to manoeuvre the boom manually. Do not attempt any repairs personally but contact your trusted installer.

Do not modify the system or the programming and adjustment parameters of the control unit: your installer is exclusively responsible for these operations.

Failure or lack of power supply: while waiting for the installer to intervene or the electricity to be restored, if the system is not equipped with back-up batteries, the automation can nonetheless be used by manually unlocking the motor (consult the instructions at the end of the chapter) and moving the boom manually.

Safety devices out of order: the automation can also be used when one or more safety devices are defective or out of order. The gate can be operated in the "**Hold-to-run**" mode in the following way:

1. submit a control to move the boom, using a transmitter or key selector, etc. If everything works properly, the boom will move normally, otherwise it will stay in position
2. in this case, within 3 seconds press the control again and hold it down
3. after roughly 2 seconds, the boom will complete the requested manoeuvre in "**Hold-to-run**" mode, in other words, it will continue to move so long as the control is held down.

If the safety devices are out of order, have the system repaired as soon as possible by a qualified technician.

The test, periodic maintenance and any repairs must be documented by the person carrying out the work and the documents must be stored by the owner of the automation. The only interventions the user may carry out periodically include cleaning of the photocell glass components (use a soft and slightly damp cloth) and removing any leaves or stones that may obstruct the automation.

Before carrying out any maintenance operations, the user of the automation must manually unlock the motor to prevent anyone from accidentally triggering the boom's movement (consult the instructions at the end of the chapter).

Maintenance: in order to ensure constant levels of safety and the longest useful life for the automation, routine maintenance must be carried out (at least every 6 months).

Only qualified personnel is authorised to carry out checks, maintenance operations and repairs.

Disposal: at the end of its useful life, the automation must be dismantled by qualified personnel and the materials must be recycled or disposed of in compliance with the local regulations in force.

Replacing the remote control battery: if your remote control appears to be working poorly after some time, or stops working altogether, it may simply depend on flat batteries (depending on how much the device is used, the batteries may last from several months to over a year). You will notice this by the fact that the indicator light signalling the transmission fails to light up, is weak or lights up only for a short time. Before contacting the installer, try replacing the battery with that of another transmitter that works properly: if the anomaly is resolved, simply replace the flat battery with one of the same type.

Unlocking and manual movement

To unlock the device:

1. turn the key slot cover

2. insert the key (**A**) and turn it towards the left or right

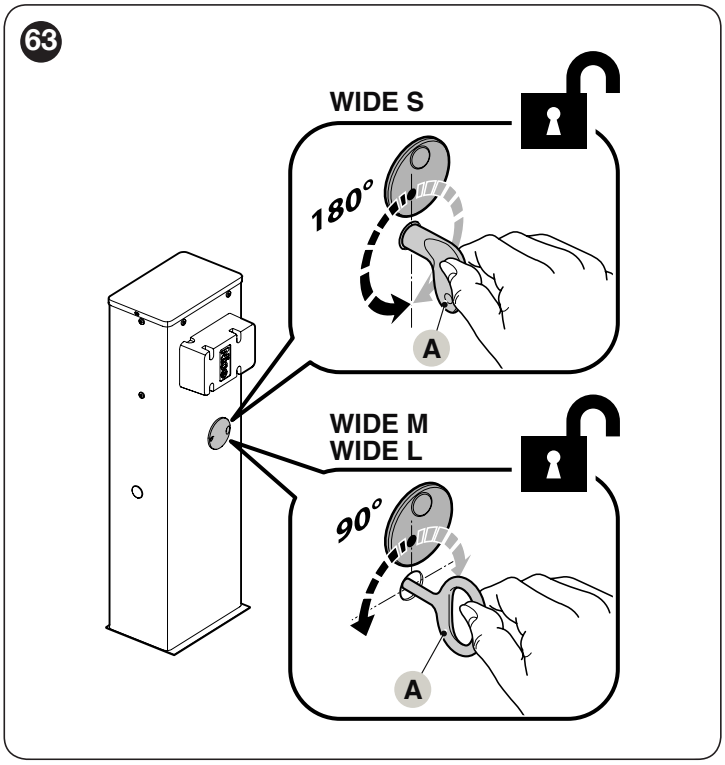

3. the gate leaf can now be moved manually to the desired position.

To lock the device:

1. turn the key (**A**) back to its initial position

2. remove the key.

3. remove the rubber cap on the opposite side of the cubicle and insert the lock cylinder through the hole

4. from inside the cubicle, insert from bottom to top the U-shaped spring to lock the lock cylinder

5. turn the key (**A**) back to its initial position

6. remove the key.

MAINTENANCE SCHEDULE (to be handed to the end user)

This maintenance register must be passed on to the new owner of the automation, after having filled in the relevant sections.

This register must contain a list of all the maintenance activities, repair work and alterations to the automation. The register must be updated every time work is carried out and must be stored carefully so that it is available for any inspections that may be required by the relative authorities.

This "Maintenance register" refers to the following automation:

model **WIDE** - serial no. ..... - installed on ..... - at .....

The following attached documents are part of the Maintenance Register:

1) - Maintenance schedule
2) - .....
3) - .....
4) - .....
5) - .....
6) - .....

According to the enclosed document "Maintenance Schedule", maintenance operations must be performed at the following intervals: **every 6 months** or every **50.000 manoeuvre cycles**, depending on the event that occurs first.

MAINTENANCE SCHEDULE

Warning! – All maintenance work on this system must be carried out by qualified technical personnel, in full compliance with the safety standards provided for by the laws in force and the safety instructions specified in the "*GENERAL SAFETY WARNINGS AND PRECAUTIONS*" chapter, at the beginning of this manual.

In general, this boom gate mechanism does not require special maintenance; however, regular checks over time will ensure system efficiency and correct operation of the safety systems installed. For maintenance of devices added to the boom gate mechanism, follow the provisions laid down in the respective maintenance schedules.
As a general rule, it is advisable to perform a periodic check every 6 months or 50.000 manoeuvres.
Bear in mind that should the spring break, the boom gate will nonetheless conform to the requirement set out in section 4.3.4 of the EN 12604:2000 standard.

The boom balancing system must be checked at least 2 times a year, preferably when the seasons change.

These checks and replacements must be performed at the scheduled maintenance intervals:

1. disconnect all power supplies
2. check for any deterioration of the components which form the barrier mechanism, paying particular attention to corrosion or oxidation of the structural parts; replace any parts that are below the required standard
3. make sure that all screwed connections are properly tightened (especially those of the balancing spring)
4. check that there is no clearance between the balancing lever and the exit shaft. If necessary, fully tighten the central screw
5. lubricate the swivel head of the balancing spring and the lower anchor
6. on versions **WIDE L**, check the perfect locking between the two boom segments. If necessary, adjust the expansion screws.
7. place the boom in the vertical position and verify that the pitch between the coils of the balancing spring is constant without any deformation
8. unlock and check the correct balancing of the boom and for any obstacles during manual opening and closing
9. relock the boom and run the testing procedure.
10. **Verification of the safeguard against the risk of lifting:** on automations with vertical movement, it is necessary to check that there is no lifting danger. This test can be carried out as follows: hang a 20 kg load (e.g. a sand bag) halfway along the length of the boom then command an opening manoeuvre and check that during the manoeuvre the boom does not exceed a height of 50 cm above its closed position. If the boom exceeds this height, the motor force must be reduced (refer to the "***Programming the control unit***" paragraph).
11. If potentially dangerous situations due to the boom's movement have been prevented by limiting the impact force, the latter must be measured according to the EN 12445 standard and, if the "motor force" control is used to aid the system in reducing the impact force, it is necessary to test various adjustments to find the one that gives the best results.
12. **Checking the efficiency of the unlocking system:** place the boom in the "closed" position and manually unlock the gearmotor (refer to the "***Manually unlocking and locking the gearmotor***" paragraph), making sure that this occurs without difficulty. Check that the manual force for moving the boom to the "open" position does not exceed 200 N (approximately 20 kg); the force is measured perpendicular to the boom and at 1 m from the axis of rotation. Lastly, check that the manual release key is available near the automation.
13. **Check the power supply disconnection system:** operate the power disconnection device and disconnect any available back-up batteries; check that all the LEDs on the control unit are OFF and that the boom remains stationary when a command is sent. Check the efficiency of the locking system to prevent any unintentional or unauthorised connection.

Table 15

TABLE ON INTERVENTIONS			
Date	**Description of intervention performed (Description of checks, adjustments, repairs, modifications, etc.)**	**Signature of Technician**	**Signature of Owner**
	All the phases envisaged in the maintenance schedule have been carried out ___YES ___NO		

NOTES

NOTES

NOTES

IDV0698A00EN_30-06-2019

Nice

Nice SpA
Via Callalta, 1
31046 Oderzo TV Italy
info@niceforyou.com

www.niceforyou.com