Nice

CE

TOO3000
TOO3024
TOO4500
TOO4524
TOO3000/V1
TOO4500/V1

Swing gate opener

EN - User, installation and safety instructions

Nice

CONTENTS

GENERAL WARNINGS:
SAFETY - INSTALLATION - USE 2

1 - PRODUCT DESCRIPTION AND INTENDED USE 3

2 - OPERATING LIMITS 3

3 - INSTALLATION 4
3.1 - Manually releasing the gearmotor 8
3.2 - Manually locking the gearmotor 8

4 - ELECTRICAL CONNECTIONS 9

5 - AUTOMATION TESTING 10
5.1 - Testing 10
5.2 - Commissioning 10

6 - OPTIONAL ACCESSORIES 11

7 - MAINTENANCE 11

CE DECLARATION OF CONFORMITY 11

8 - DISPOSAL OF THE PRODUCT 12

9 - TECHNICAL SPECIFICATIONS 12

Operation manual *(to be given to the final user)* 13
(detachable insert)

GENERAL WARNINGS: SAFETY - INSTALLATION - USE (original instructions in Italian)

ATTENTION **Important safety instructions. Follow all instructions as improper installation may cause serious damage**

ATTENTION **Important safety instructions. It is important for you to comply with these instructions for your own and other people's safety. Keep these instructions**

- Before commencing the installation, check the "Technical characteristics" (in this manual), in particular whether this product is suitable for automating your guided part. If it is not suitable, DO NOT continue with the installation
- The product cannot be used before it has been commissioned as specified in the chapter on "Testing and commissioning"

ATTENTION **According to the most recent European legislation, the implementation of an automation system must comply with the harmonised standards provided by the Machinery Directive in force, which enables declaration of the presumed conformity of the automation. Taking this into account, all operations regarding connection to the electricity grid, as well as product testing, commissioning and maintenance, must be performed exclusively by a qualified and skilled technician!**

- Before proceeding with the installation of the product, check that all the materials are in good working order and suited to the intended applications
- This product is not intended to be used by persons (including children) whose physical, sensory or mental capacities are reduced, or who lack the necessary experience or skill
- Children must not play with the appliance
- Do not allow children to play with the fixed control devices of the product. Keep the remote controls away from children

ATTENTION In order to avoid any danger from inadvertent resetting of the thermal cut-off device, this appliance must not be powered through an external switching device, such as a timer, or connected to a supply that is regularly powered or switched off by the circuit

- Provide a disconnection device (not supplied) in the plant's power supply grid, with a contact opening distance permitting complete disconnection under the conditions dictated by overvoltage category III
- Handle the product with care during installation, taking care to avoid crushing, denting or dropping it, or allowing contact with liquids of any kind. Keep the product away from sources of heat and naked flames. Failure to observe the above can damage the product, and increase the risk of danger or malfunction. Should this happen, stop installation immediately and contact Customer Service
- The manufacturer assumes no liability for damage to property, items or persons resulting from non-compliance with the assembly instructions. In such cases the warranty for material defects is excluded
- The weighted sound pressure level of the emission A is lower than 70 dB(A)
- Cleaning and maintenance to be carried out by the user must not be carried out by unsupervised children
- Before working on the system (maintenance, cleaning), always disconnect the product from the mains power supply
- Check the system periodically, in particular all cables, springs and supports to detect possible imbalances, signs of wear or damage. Do not use, if repairs or adjustments are necessary, since installation failure or an incorrectly balanced automation may cause injury
- The packing materials of the product must be disposed of in compliance with local regulations
- When operating a biased-off switch, make sure that other persons are kept away
- When operating the gate, keep an eye on the automated mechanism and keep all bystanders at a safe distance until the movement has been completed
- Do not operate the product if anyone is working nearby; disconnect its power supply before permitting such work to be done
- If the power cable is damaged, it must be replaced by the manufacturer or by an appointed servicing company or similarly qualified person in order to prevent any form of risk

INSTALLATION WARNINGS

- Prior to installing the drive motor, check that all mechanical components are in good working order and properly balanced, and that the automation moves correctly
- If the gate or door being automated has a pedestrian gate, then the system must include a control device that will inhibit the operation of the motor when the pedestrian gate is open
- Make sure that the control devices are kept far from moving parts but nonetheless in a visible position. Unless a selector is used, the control devices must be installed at a height of at least 1.5 m and must not be accessible
- That windows, having a gap exceeding 200 mm when open, are to be closed using a biased-off switch if the opening movement is controlled by a fire-sensing system
- Ensure that entrapment between the driven part and the surrounding fixed parts due to the opening movement of the driven part is avoided
- Permanently fix the label concerning the manual release adjacent to its actuating member
- After installing the drive motor, make sure that the mechanism, protective system and all manual manoeuvres operate properly

1 PRODUCT DESCRIPTION AND INTENDED USE

This product is intended to be used to automate swing gates. **CAUTION! – Any use other than the intended use, and any use in conditions other than those described in this manual, is improper and forbidden!**

The product is an electromechanical gearmotor, available in two versions:
24V : TOO3024 - TOO4524
230V : TOO3000 - TOO4500
120V : TOO3000/V1 - TOO4500/V1

It is equipped with a 24V - 120 V DC motor or 220V AC motor (depending on the version) and a worm screw reduction unit.
The gearmotor is powered off the external control unit to which it is connected. **WARNING! – With the motors TOO3024 and TOO4524, only the control unit model MC424LR01 can be used!**
In case of power outage, the gate can be operated manually by disengaging the gearmotor (par. 3.1).

2 APPLICATION LIMITS

Caution! - The motor must be installed by qualified personnel in compliance with current legislation, standards and regulations, and the directions provided in this manual.

Before proceeding with the installation:

- Check that the area to which the gearmotor is to be mounted is large enough.

TOO3000 - TOO3024 - TOO3000/V1

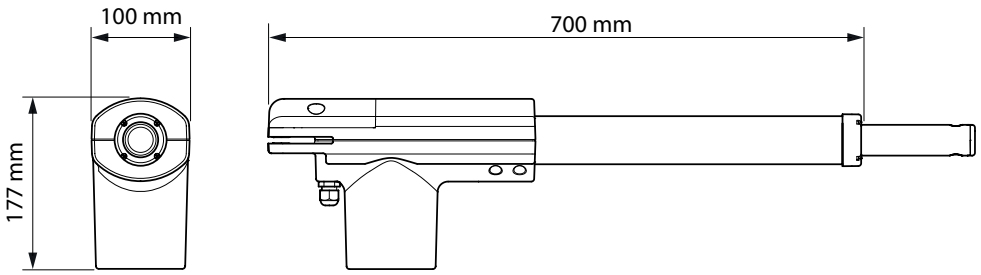

TOO4500 - TOO4524 - TOO4500/V1

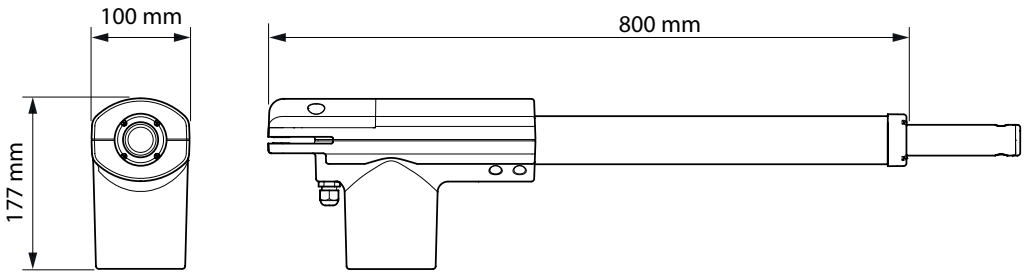

- Check the gate's opening movement and the force exerted by the motor: these depend on the position of the rear bracket.

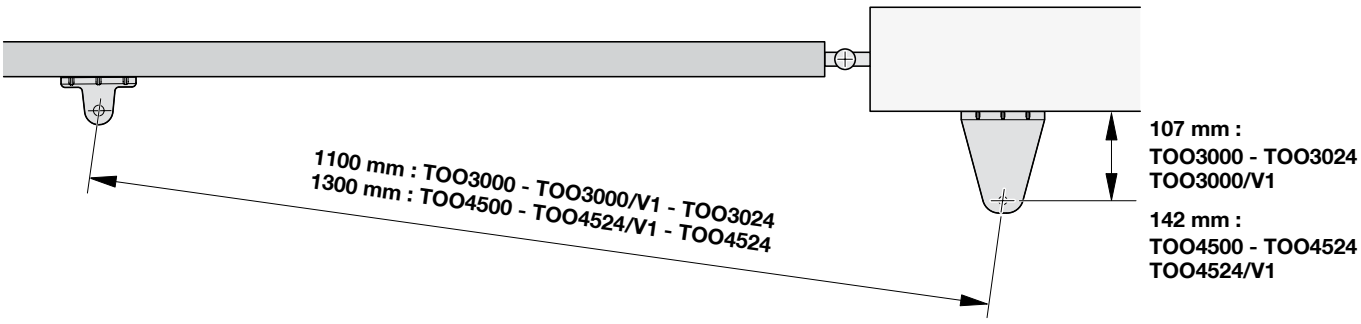

- Define the maximum opening angle of the gate leaf and the appropriate motor strength for the relevant system (see table).

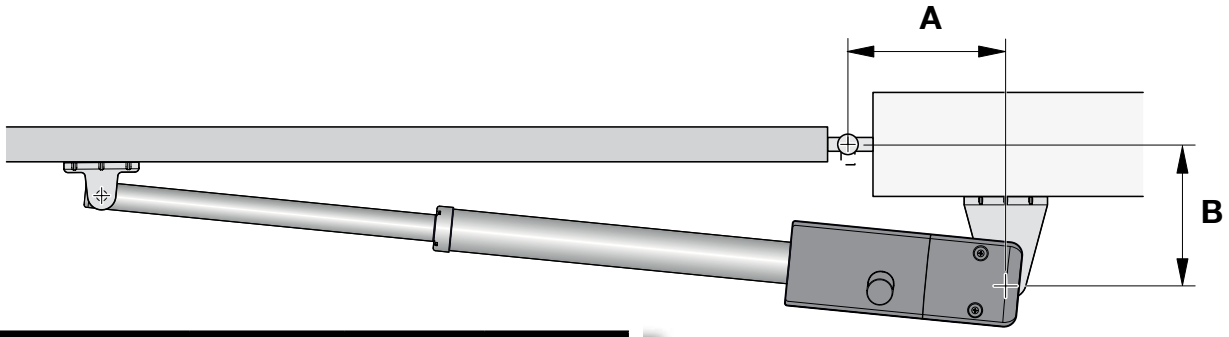

TOO		A	B
TOO3000 - TOO3024 TOO3000/V1	90°	95	270
	90°	195	200
	110°	150	150
TOO4500 - TOO4524 TOO4524/V1	90°	200	250
	110°	170	170

3 INSTALLATION

⚠ Important! Before installing the product, refer to chapters 2 and 9 (technical specifications).

Fig. 1 shows the contents of the package: check the material.

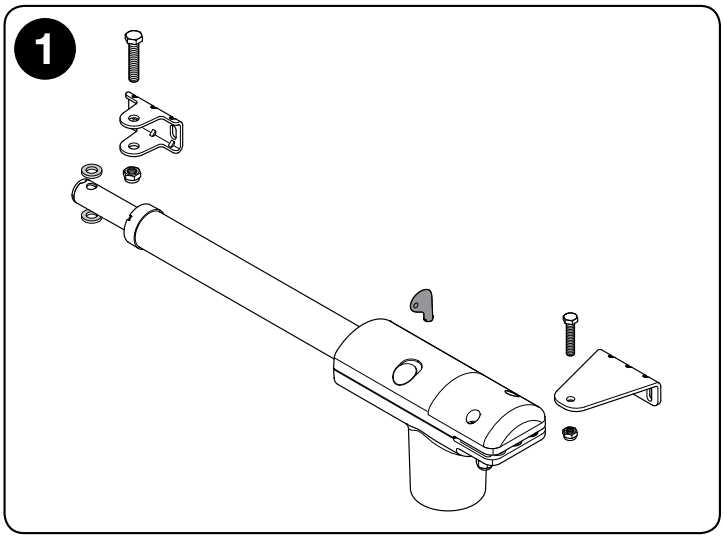

Fig. 2 shows the location of the various components of a typical system mounting Nice accessories:

a - electromechanical gearmotors
b - vertical electric lock
c - photocell pair
d - mechanical limit switch pair (opening)
e - photocell pillars
f - flasher
g - keyswitch/digital keypad
h - control unit
A60: TOO3000 - TOO4500
MC424: TOO3024 - TOO4524
A60/V1: TOO3000/V1 - TOO4500/V1

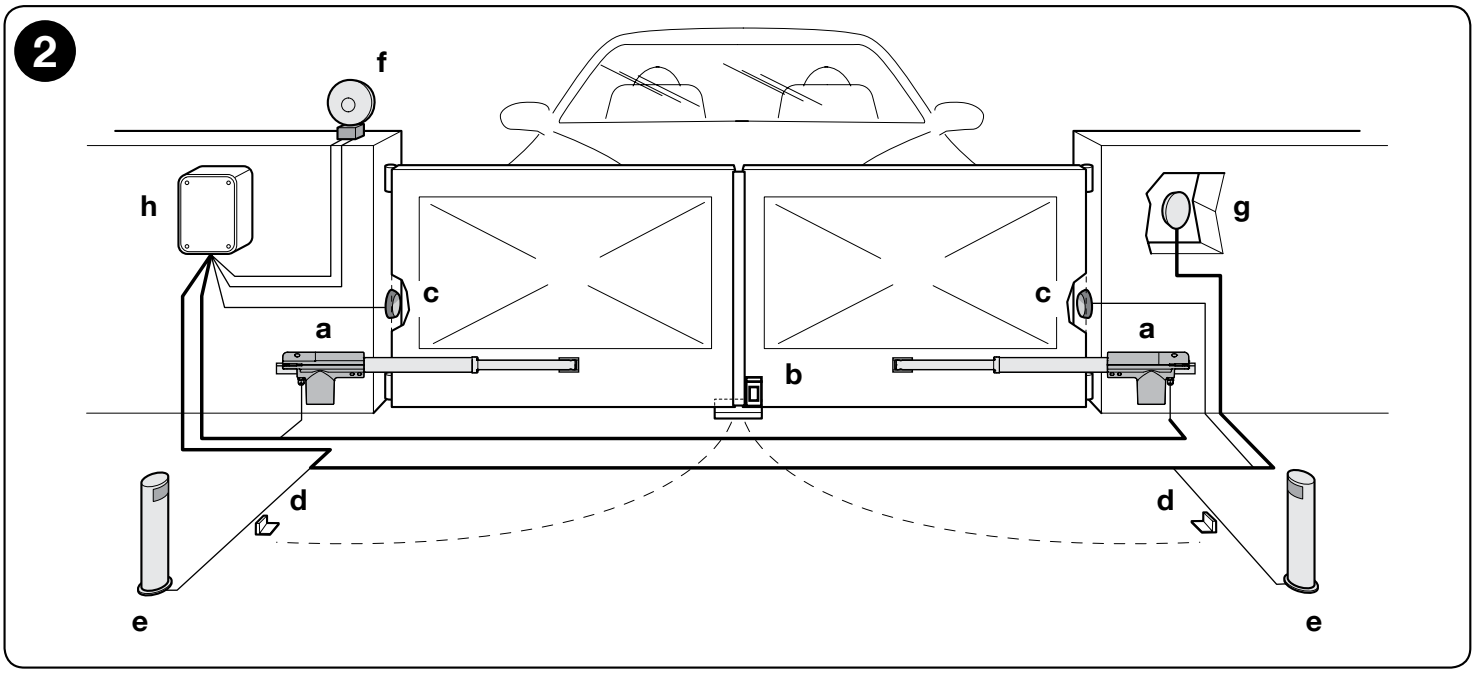

WARNINGS

• Incorrect installation may cause serious physical injury to those working on or using the system.

01.	Identify the front and rear bracket mounting positions
02.	Secure the rear bracket with reference to its specified installation positions
03.	Mount the gearmotor to the rear bracket

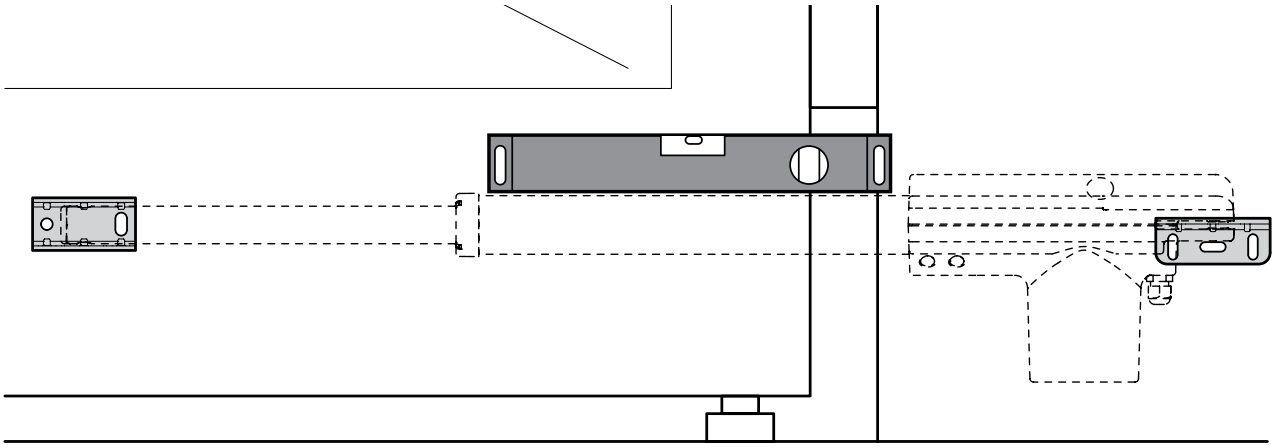

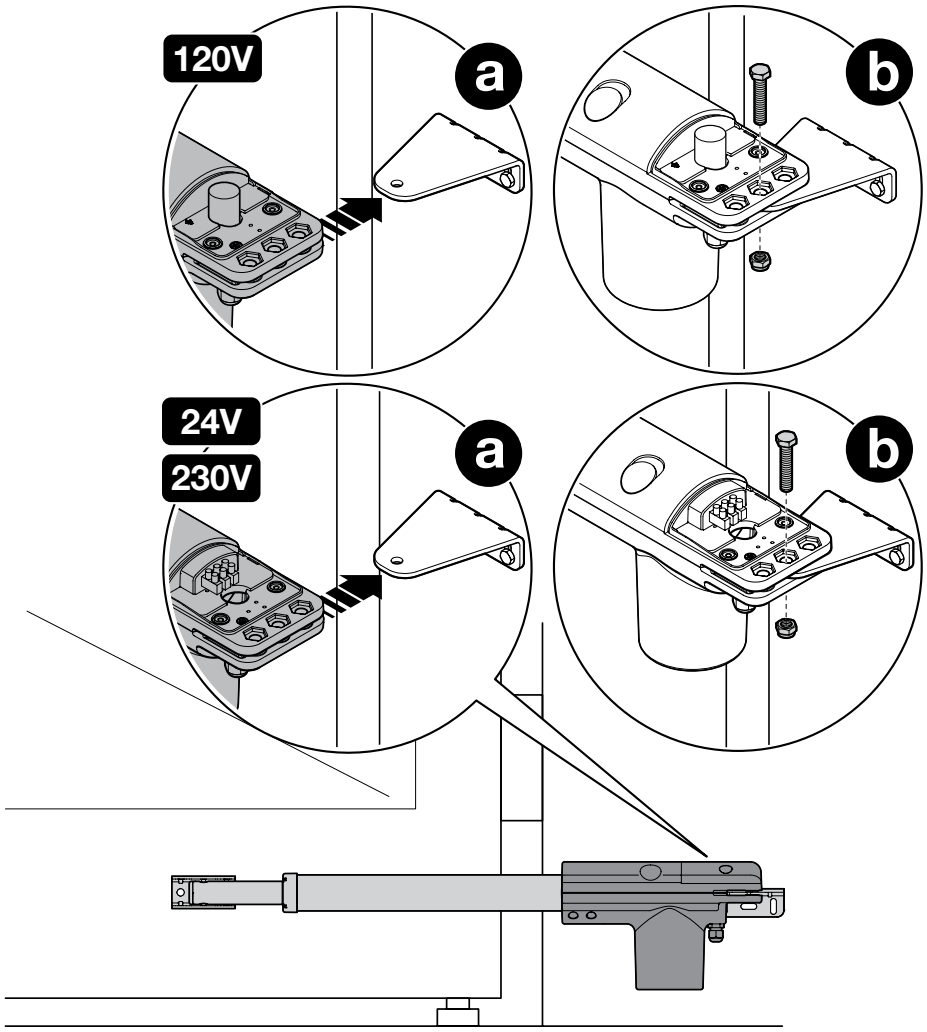

04.	Manually release the gearmotor 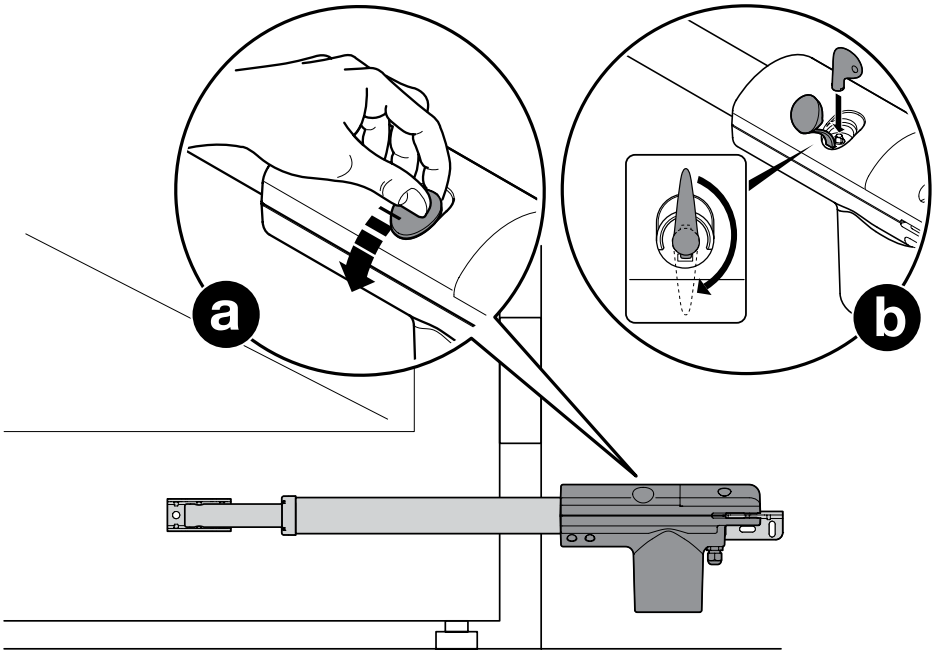
05.	Pull the rod completely out
06.	Provisionally locate the front bracket onto the gate
07.	Check that the gearmotor is level, then fit and secure the rod to the front bracket 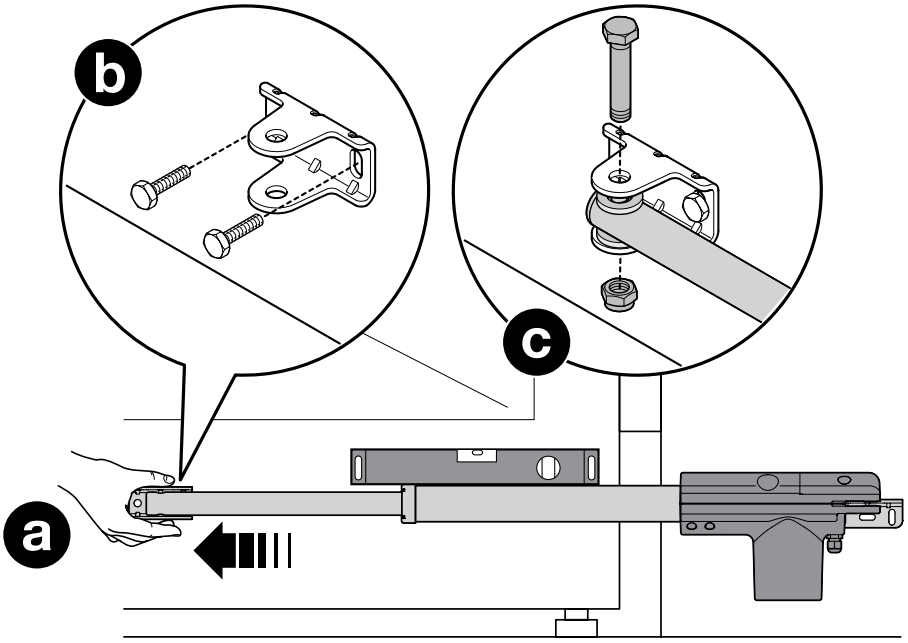

08. Check manually that:
- when the gate is fully open, it halts against its mechanical stops
- the gate swings freely and without resistance

Correct any defects

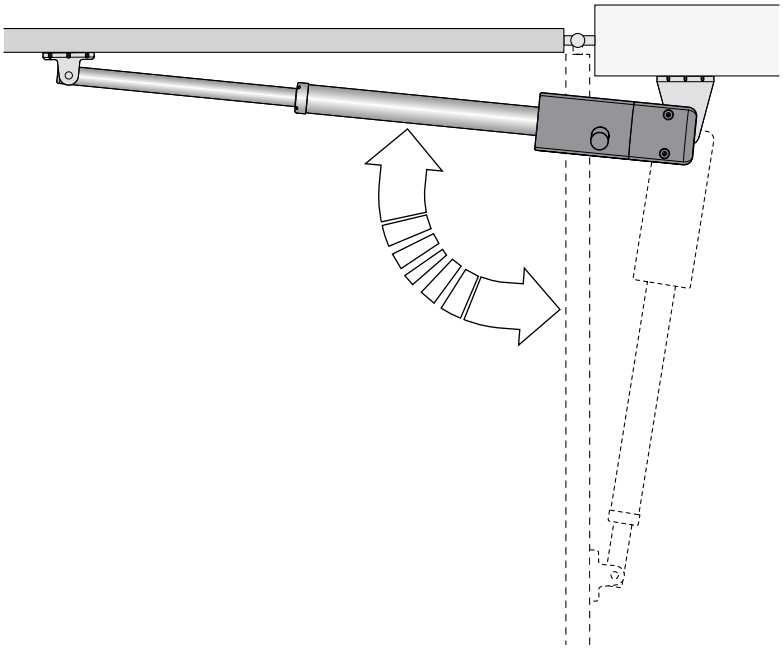

09. **a** - Unhook the rod from the front bracket
b - Mount the latter to the gate permanently
c - Permanently mount the rod to the front bracket

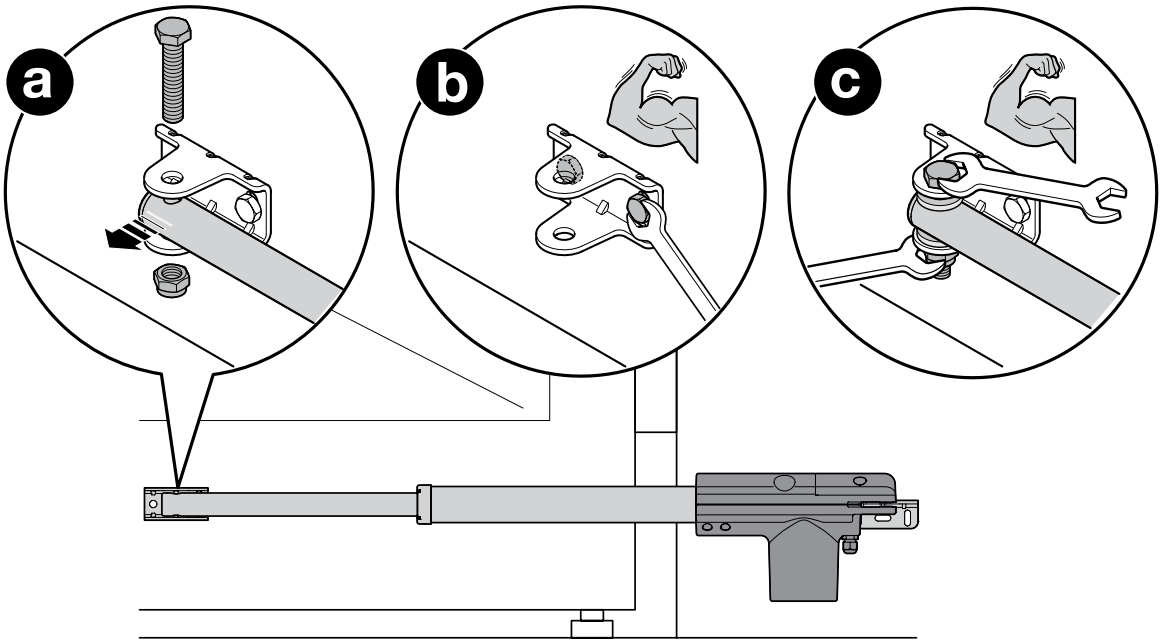

10.	Lock the gearmotor

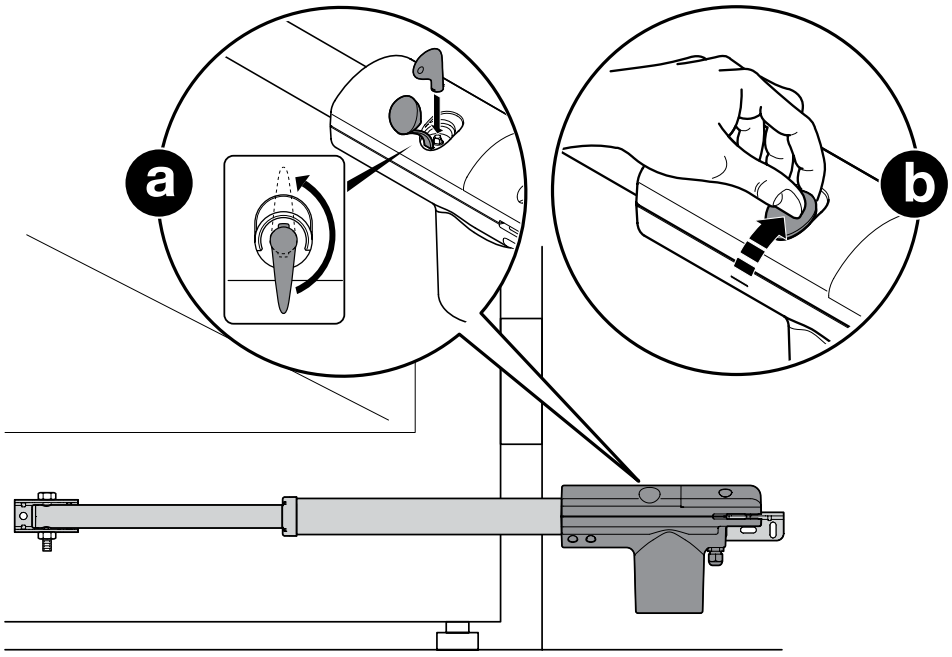

Follow this procedure for both gearmotors.

3.1 - Manually releasing the gearmotor

01.	Raise the rubber cap
02.	Fit the provided wrench and rotate it CW by 90°

Follow this procedure for both gearmotors.

3.2 - Manually locking the gearmotor

01.	Move the gate to the halfway open position by hand
02.	Raise the rubber cap
03.	Fit the provided wrench and rotate it CCW by 90°

Follow this procedure for both gearmotors.

4 ELECTRICAL CONNECTIONS

CAUTION!

– Incorrect connections can cause faults or hazards; therefore ensure that the specified connections are strictly observed.

– Hook up the unit with the electrical power shut off.

01.	Remove the gearmotor's cover (**a**)
02.	Loosen the cable clamp (**b**) and run the cable through it (**c**)
03.	Hook up the cables and connect the earth cable to its eyebolt

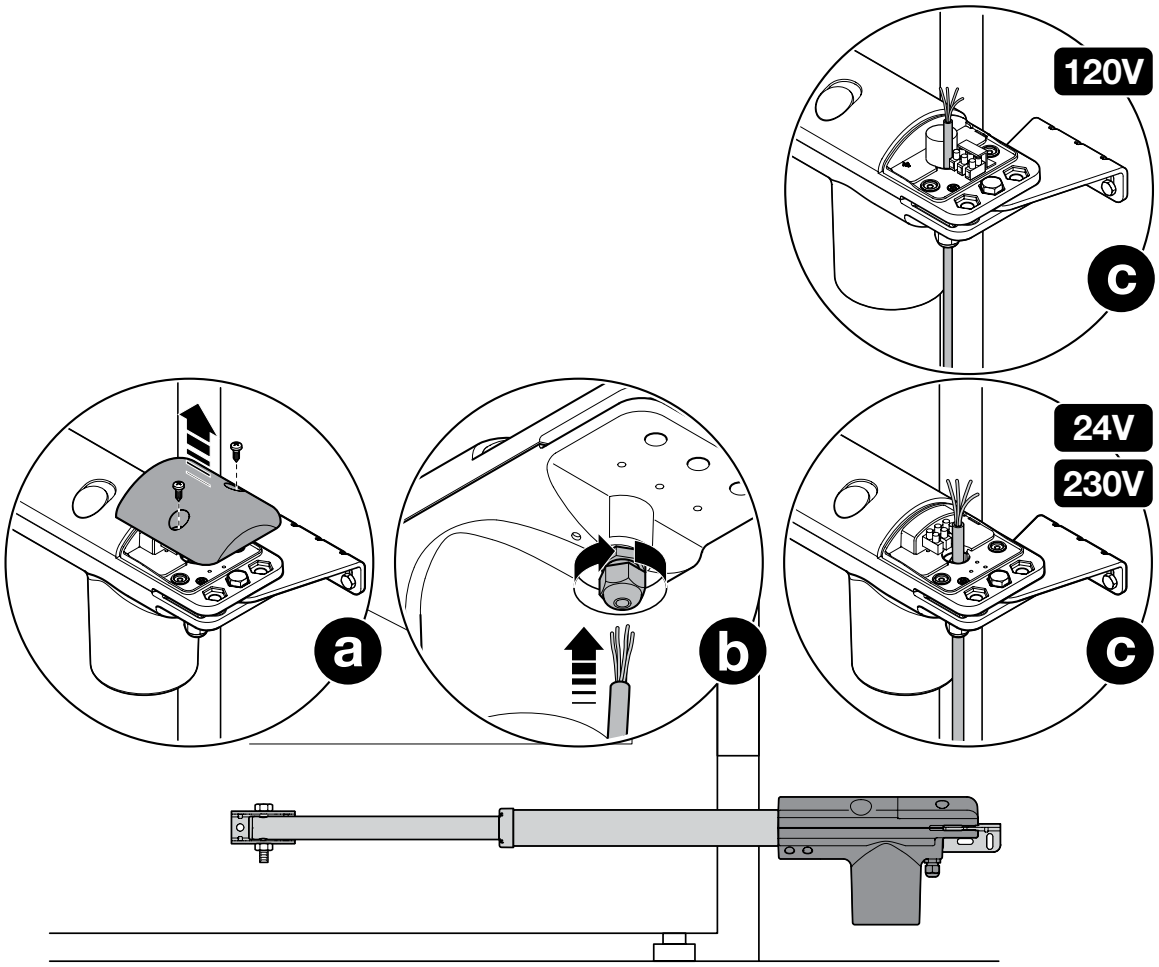

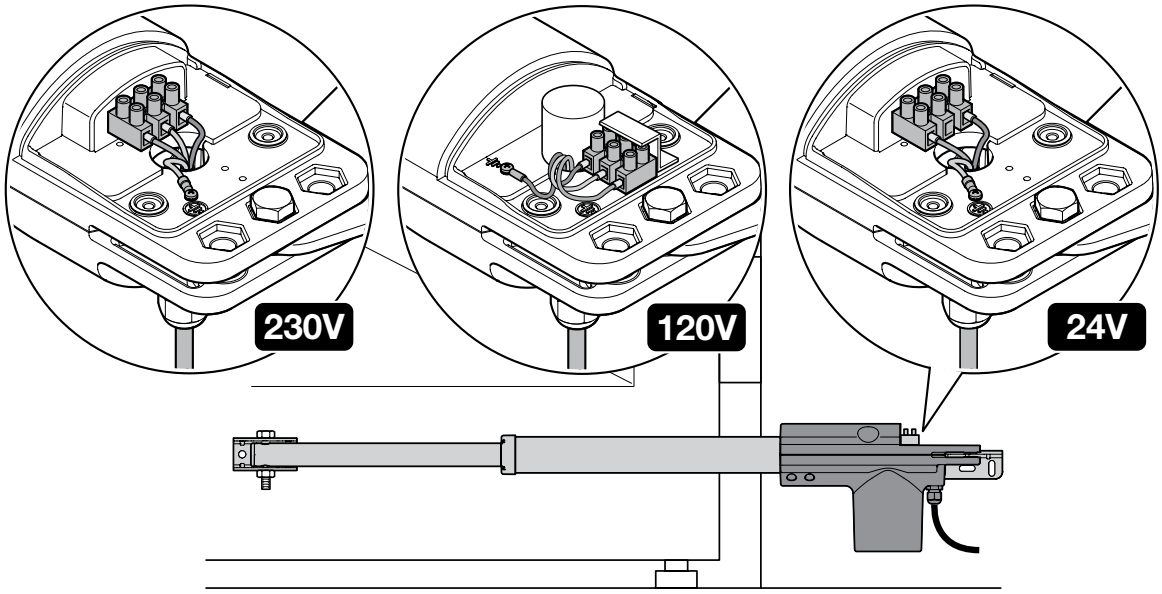

04.	Tighten down the cable clamp and put the cover back on

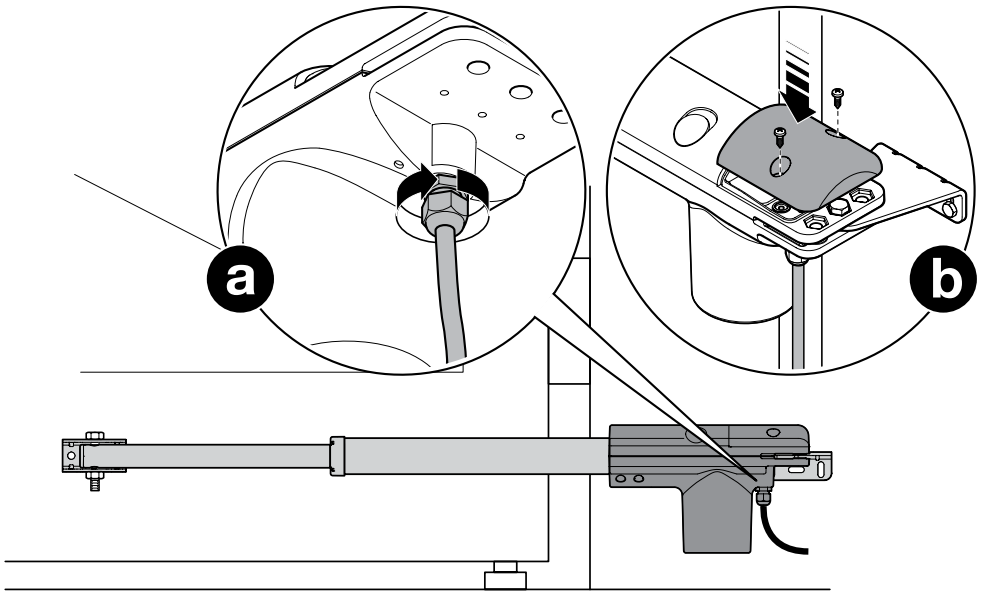

5 AUTOMATION TESTING

These are the most important stages in the automation's construction in order to ensure maximum safety. Testing can also be adopted as a method for periodically checking that all the various devices in the system are functioning correctly.
Testing of the entire system must be performed by qualified and experienced personnel who must establish which tests to conduct on the basis of the risks involved, and verify the compliance of the system with applicable regulations, legislation and standards, in particular with all the provisions of EN12445 which establishes the test methods for automation systems for gates.

5.1 - Testing

Each component of the system, (safety edges, photocells, emergency stop, etc.) requires a specific testing phase. To do so, follow the procedures given in the instruction manuals.

Run the test as follows:

01.	Ensure that the instructions outlined in this manual and in particular in chapter 1 have been observed in full.
02.	Manually release the gearmotor
03.	Make sure you can move the door manually both during opening and closing with a force of max. 390 N (40 kg approx.).
04.	Manually lock the gearmotor
05.	Hook up the electrical power supply
06.	Use the control or stop devices to test the opening, closing and stopping of the gate and that it behaves as intended.
07.	Check the operation of all safety devices, and check that the gate performs as it should.
08.	Activate a closing manoeuvre and check impact force of the door against the mechanical stop. If necessary, reduce the pressure for better adjustment
09.	If the dangerous situations caused by the movement of the gate have been made safe by limiting the impact force, the user must measure the impact force according to EN12445.
Note – The gearmotor's torque cannot be adjusted directly: this adjustment is done by the control unit.	

5.2 - Commissioning

Commissioning may only be done when all the gearmotor tests specified in par. 5.1, and those of the other equipment, have been passed: to commission the unit, refer to the control unit manual.

IMPORTANT - It is not permissible to execute partial commissioning or to enable use of the system in makeshift conditions.

6 OPTIONAL ACCESSORIES

The following optional accessories are available:

ACCESSORIES for the 230V / 120V version	ACCESSORIES for the 24V (230V / 120V) version
PLA10	PLA10
PLA11	PLA11
	PS124

Refer to the user manuals of the various individual products.

7 MAINTENANCE

To ensure that the level of safety of the installation is maintained and that the system remains reliable and operational, it must be serviced regularly in observance of the safety regulations given in this manual and established legislation.
The gearmotor must be serviced no later than 6 months after commissioning.

01.	Disconnect all power supplies
02.	Check for any deterioration in automation system components, paying special attention to erosion or oxidation of its structural parts. Replace any parts which are below the required standard.
03.	Check that all screw fasteners are fully tightened down
04.	Check the wear of all moving parts and replace any worn components
05.	Connect the power supplies up again, and run all the tests and checks described in Chapter 4

For the other equipment in the system, refer to its user manuals.

CE Declaration of Conformity and declaration of incorporation of partly completed machinery

Declaration in accordance with the following Directives: 12004/108/EC (EMC); 2006/42/EC (MD) annex II, part B

Note – The content of this declaration corresponds to that specified in the official document deposited at the Nice S.p.A. headquarters and, in particular, to the latest revised edition available prior to the publishing of this manual. The text herein has been re-edited for editorial purposes. A copy of the original declaration can be requested from Nice S.p.A. (prov. of Treviso) Italy.

Declaration number: 507/TOO **Revision:** 3 **Language:** EN
Manufacturer's Name: NICE s.p.a.
Address: Via Pezza Alta N°13, 31046 Rustignè di Oderzo (TV) Italy
Person authorized to compile the technical documentation: NICE s.p.a.
Type of product: Telescopic motor for swing gates
Model / Type: TOO3000, TOO3024, TOO4500, TOO4524, TOO3000/V1, TOO4500/V1
Accessories:

The undersigned Mauro Sordini, as Chief Executive Officer, hereby declares under his own responsibility that the products identified above comply with the provisions of the following directives:

- DIRECTIVE 2004/108/EC OF THE EUROPEAN PARLIAMENT AND OF THE COUNCIL of 15 December 2004 on the approximation of the laws of the Member States relating to electromagnetic compatibility and repealing Directive 89/336/EEC, in accordance with following harmonised standards: EN 61000-6-2:2005, EN 61000-6-4:2007 + A1:2011

In addition, the product conforms to the following directive in accordance with the provisions applicable to partly completed machinery:

- Directive 2006/42/EC of the European Parliament and of the Council of 17 May 2006 on machinery, and amending Directive 95/16/EC (recast), in accordance with the following harmonised standards:
- I hereby declare that the pertinent technical documentation has been drafted in accordance with Annex VII B of Directive 2006/42/EC and that the following essential requirements have been satisfied: 1.1.1- 1.1.2- 1.1.3- 1.2.1-1.2.6- 1.5.1-1.5.2- 1.5.5- 1.5.6- 1.5.7- 1.5.8- 1.5.10- 1.5.11
- The manufacturer agrees to submit pertinent information on the partly completed machinery to the national authorities, in response to a motivated request, without affecting its intellectual property rights.
- If the partly completed machinery is operated in a European country with an official language other than the language used in this declaration, the importer must include a translation with this declaration.
- The partly completed machinery must not be operated until the final machine in which it is to be incorporated is declared to conform to the provisions of Directive 2006/42/EC, if applicable.

The product also complies with the following standards: EN 60335-1:2002 + A1:2004 + A11:2004 + A12:2006 + A2:2006 + A13:2008 + A14:2010 + A15:2011; EN 60335-2-103:2003 +A11:2009

The parts of the product which are subject to the following standards comply with them:
EN 13241-1:2003+A1:2011, EN 12445:2002, EN 12453:2002, EN 12978:2003+A1:2009

Oderzo, 19 November 2015

Mr. **Mauro Sordini**
(Chief Executive Officer)

8 DISPOSAL OF THE PRODUCT

This product is an integral part of the automation and must be scrapped with it.
Similarly to the installation operations, also at the end of this product's working life the dismantling and scrapping operations must be performed by qualified personnel.
This product is made up of different types of material, some of which can be recycled while others must be disposed of. Seek information on the recycling and disposal systems envisaged by the local regulations in your area for this product category.

⚠ CAUTION! – some parts of the product may contain polluting or hazardous substances which, if disposed of into the environment, constitute serious environmental and health risks.

As indicated by the symbol, the product may not be disposed of as domestic waste. Sort the materials for disposal, according to the methods envisaged by current legislation in your area, or return the product to the retailer when purchasing an equivalent product.

⚠ CAUTION! – Local legislation may envisage serious fines in the event of abusive disposal of this product.

9 TECHNICAL SPECIFICATIONS

WARNINGS: • All technical specifications stated in this section refer to an ambient temperature of 20°C (± 5°C). • Nice S.p.a. reserves the right to apply modifications to products at any time when deemed necessary, while maintaining the same intended use and functionality.

MODEL	TOO4500	TOO4524	TOO3000	TOO3024	TOO3000/V1	TOO4500/V1
Motor voltage [V]	230	24	230	24	120	120
Frequency [Hz]	50	DC	50	DC	60	60
Max gate length [m]	4.5	4.5	3	3	3	4.5
Max gate weight (kg)	250	250	300	300	300	250
IP protection rating	54	54	54	54	54	54
Operating temperature [C°]	-20 to +50	-20 to +50	-20 to +50	-20 to +50	-20 to +50	-20 to +50
Weight of motor [kg]	6	5.5	6	5.5	5.5	6
Speed [m/s]	0.016	0.014	0.016	0.014	0.016	0.016
Travel [mm]	500	500	400	400	400	500
Capacitor [mF]	7	-	7	-	20	20
Nominal current draw [A]	1.1	1.1	1.1	1.1	1.1	1.1
Maximum current draw [A]	1.5	5	1.5	5	1.5	1.5
Nominal power draw [W]	250	30	250	30	250	250
Maximum power draw [W]	340	120	340	120	340	340
Nominal force [N]	300	300	300	300	300	300
Maximum force [N]	2000	1800	2000	1800	2000	2000
Cycles (cycles/hour)	24	continuous	24	continuous	24	24
Control unit	A60	MC424L (230V) MC424L/V1 (120V)	A60	MC424L (230V) MC424L/V1 (120V)	A60/A/V1	A60/A/V1
Dimensions [mm]	800 x 100 x 177 h	800 x 100 x 177 h	700 x 100 x 177 h	700 x 100 x 177 h	700 x 100 x 177 h	800 x 100 x 177 h

Operation manual
(to be given to the final user)

- **Before using your automation system for the first time,** ask the installer to explain the origin of any residual risks; take a few minutes to read the user **manual given you by the** installer. Keep the manual for consultation when in doubt and make sure it is passed on to any new owners of the automation.
- **Your automation system is a machine that will faithfully execute your commands;** unreasonable or improper use may generate dangers: do not operate the system if there are people, animals or objects within its range of operation.
- **Children:** automation systems are designed to guarantee high levels of safety and security.They are equipped with detection devices that prevent movement if people or objects are in the way, guaranteeing safe and reliable activation. However, children should not be allowed to play in the vicinity of automated systems; to prevent any accidental activations, keep all remote controls away from children: **they are not toys!**
- **Faults:** if you notice that the automation is not functioning correctly, disconnect the electrical power supply from the system. Never attempt any repairs; contact your local installer for assistance. The system can be operated manually: release the gearmotor, as described in “Manual release and lock”.
- **Maintenance:** As with all machinery, the automation requires periodic maintenance to ensure optimal operation, extended lifetime and complete safety. Arrange a periodic maintenance schedule with your installation technician. Nice recommends that maintenance checks be carried out every six months for normal domestic use, but this interval may very depending on the intensity of use. Only qualified personnel are authorised to carry out checks, maintenance operations and repairs.
- Do not modify the system or its programming and adjustment parameters in any way, even if you feel capable of doing it: your installation technician is responsible for the system.
- The final test, periodic maintenance and any repairs must be documented by the person who has performed them; these documents remain in the custody of the owner of the system.

  The only recommended maintenance operations that the user can perform periodically are the removal of leaves or debris that may impede the automation.
  Before proceeding, **release the automation** (**fig. A**) and **disconnect all power supplies** (including the backup battery, if present).
- **Disposal:** At the end of the automation’s lifetime, ensure that it is disposed of by qualified personnel and that the materials are recycled or scrapped according to local regulations.
- **Manual release and lock**
  - Releasing the gearmotor: (fig. A)
  - Locking the gearmotor: (fig. B)

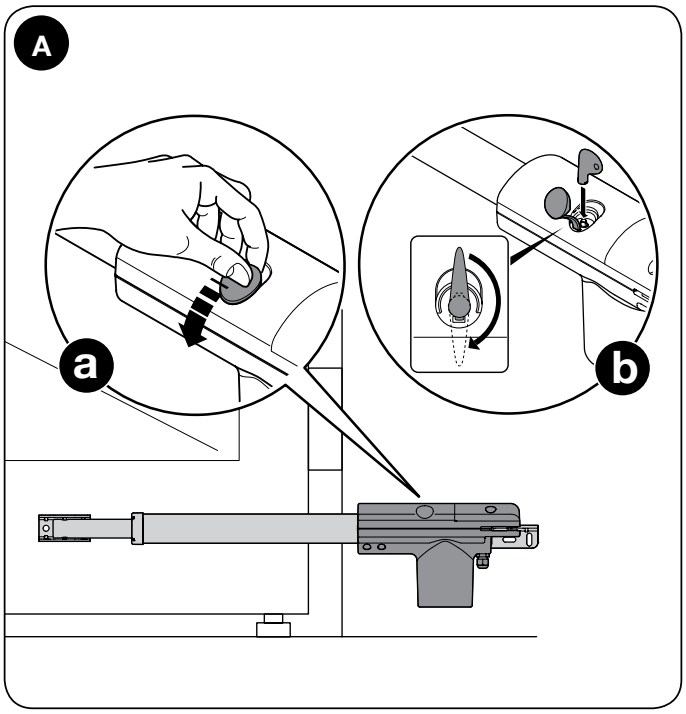

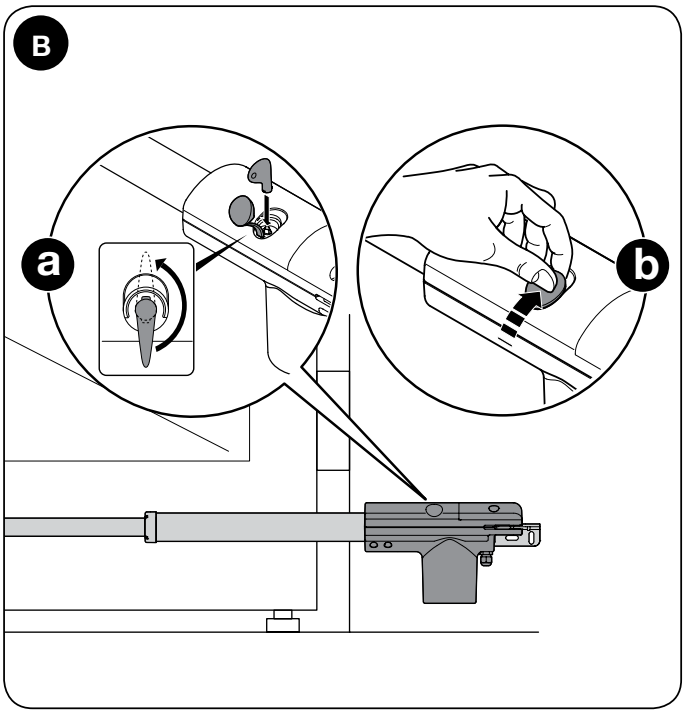

IDV0419A00EN_12-02-2016_DIGITAL VERSION

Nice

Nice SpA
Oderzo TV Italia
info@niceforyou.com